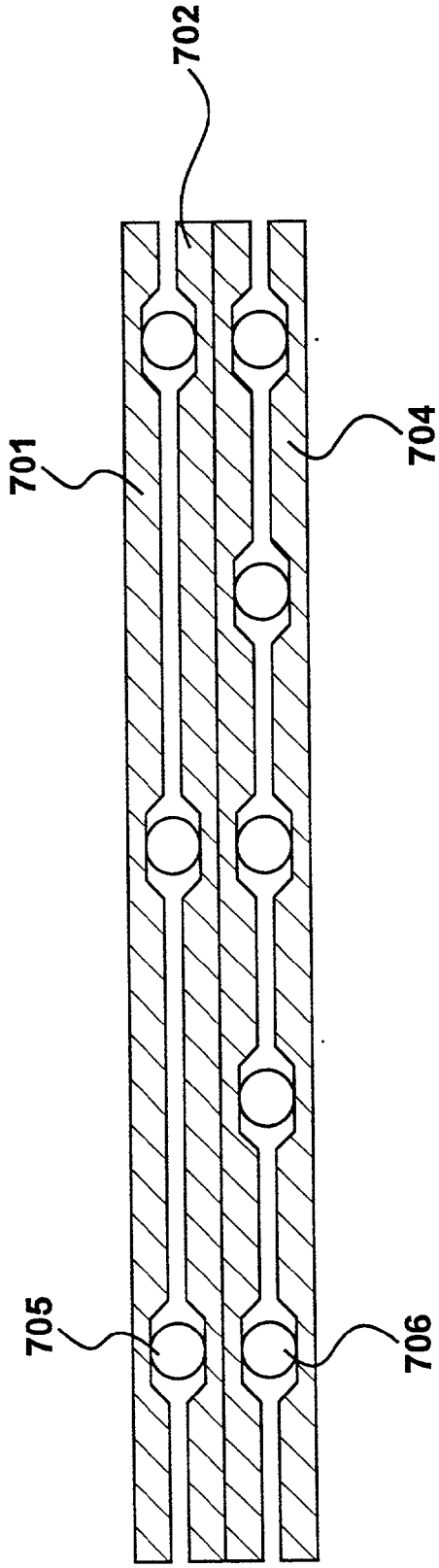

Figure 7