FIG.4A

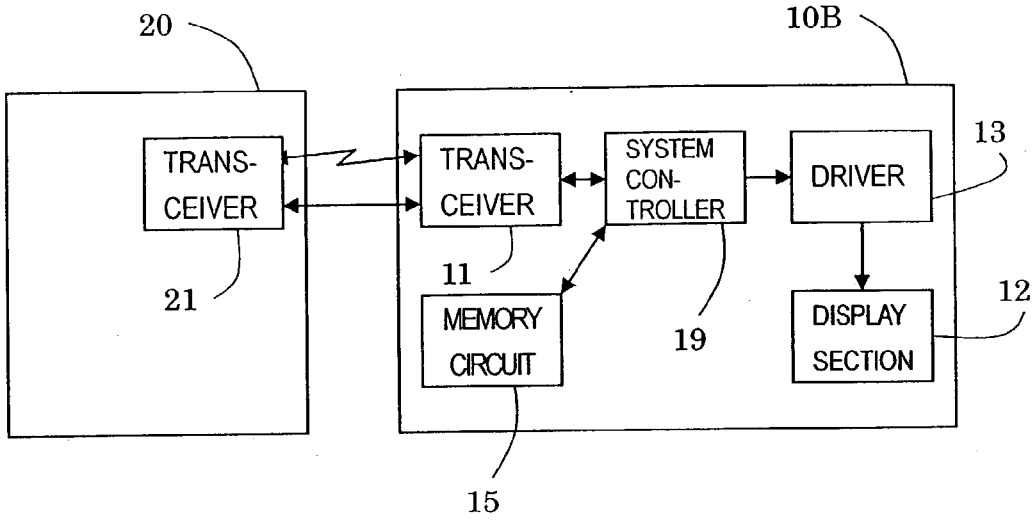
20
10B
TRANS-
CEIVER
TRANS-
CEIVER
SYSTEM
CON-
TROLLER
DRIVER
13
21
11
MEMORY
CIRCUIT
19
DISPLAY
SECTION
12
15

FIG.4B

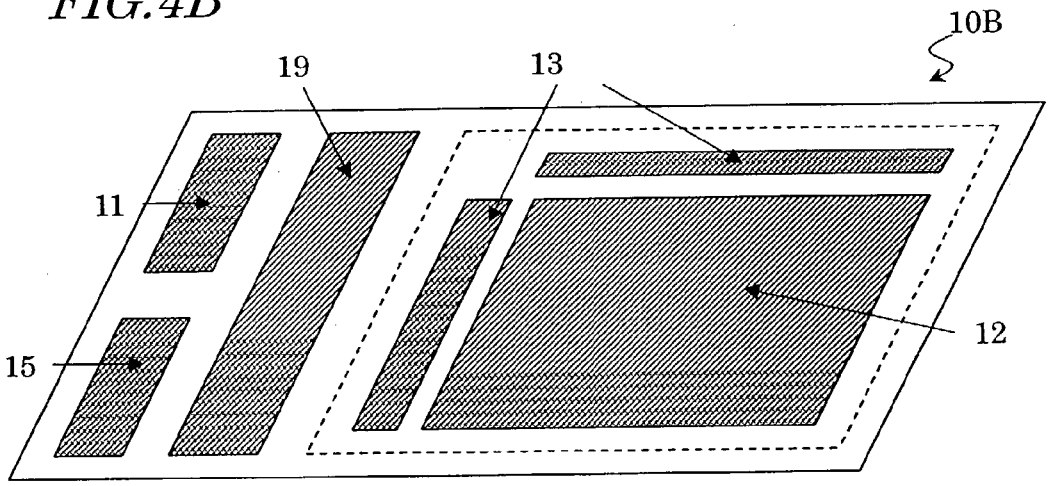
10B
19
13
11
12
15