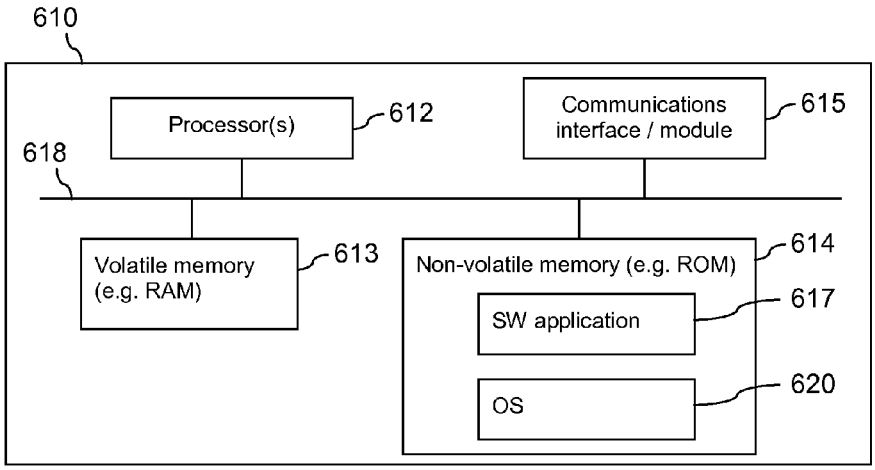
610
Processor(s)
612
Communications interface / module
615
618
Volatile memory (e.g. RAM)
613
Non-volatile memory (e.g. ROM)
614
SW application
617
OS
620

FIG. 9

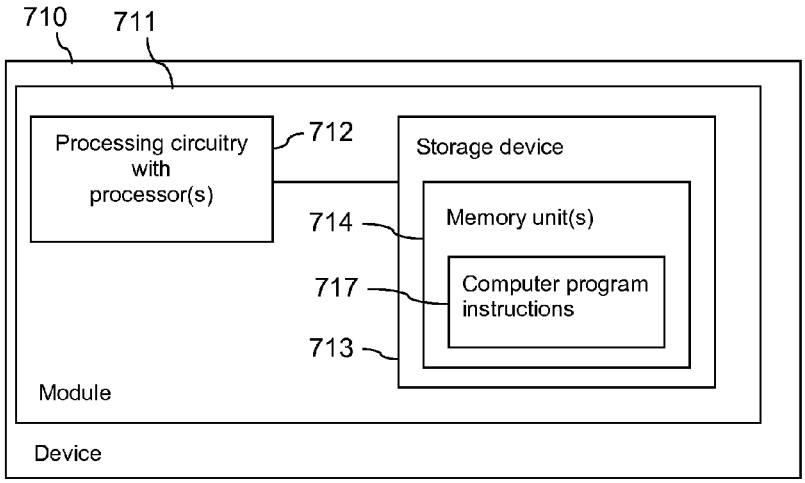
710
711
Processing circuitry with processor(s)
712
Storage device
714
Memory unit(s)
717
Computer program instructions
713
Module
Device

FIG. 10