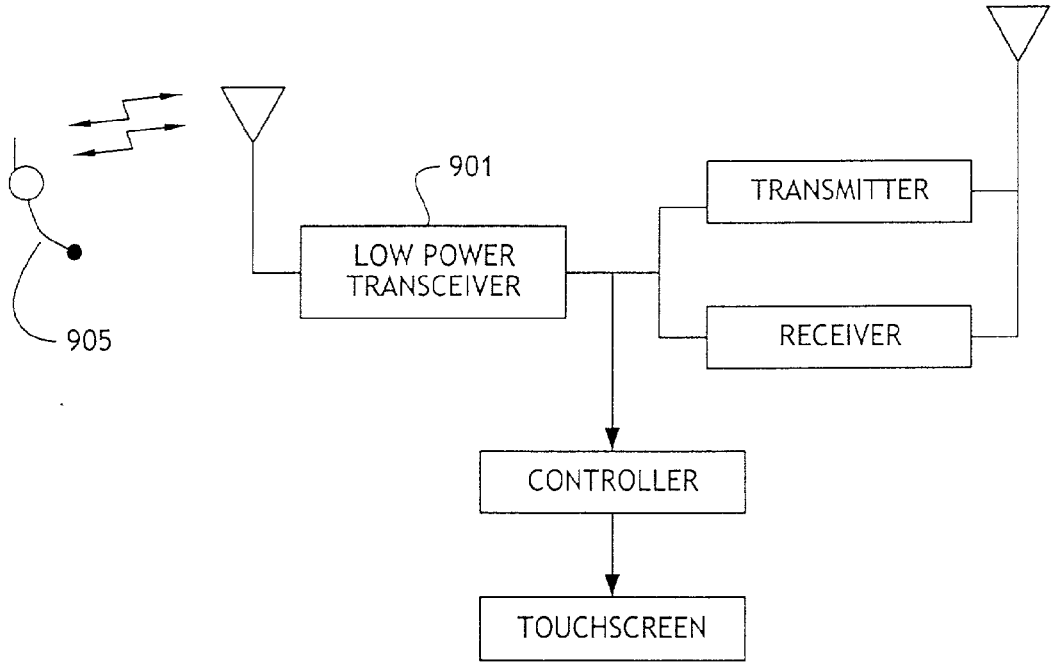
901
LOW POWER TRANSCEIVER
TRANSMITTER
RECEIVER
905
CONTROLLER
TOUCHSCREEN

Fig. 9