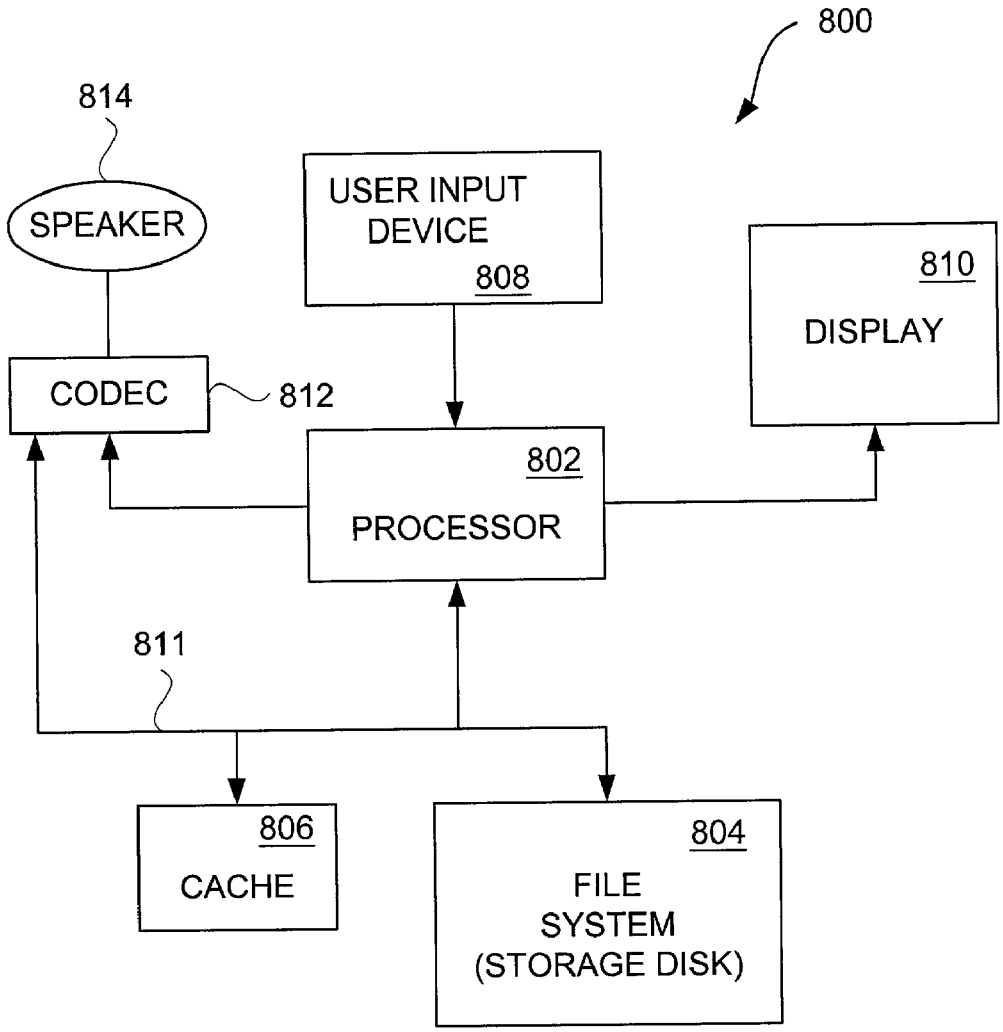
800
814
SPEAKER
USER INPUT DEVICE
808
810
DISPLAY
CODEC
812
802
PROCESSOR
811
806
CACHE
804
FILE SYSTEM (STORAGE DISK)

FIG. 8A