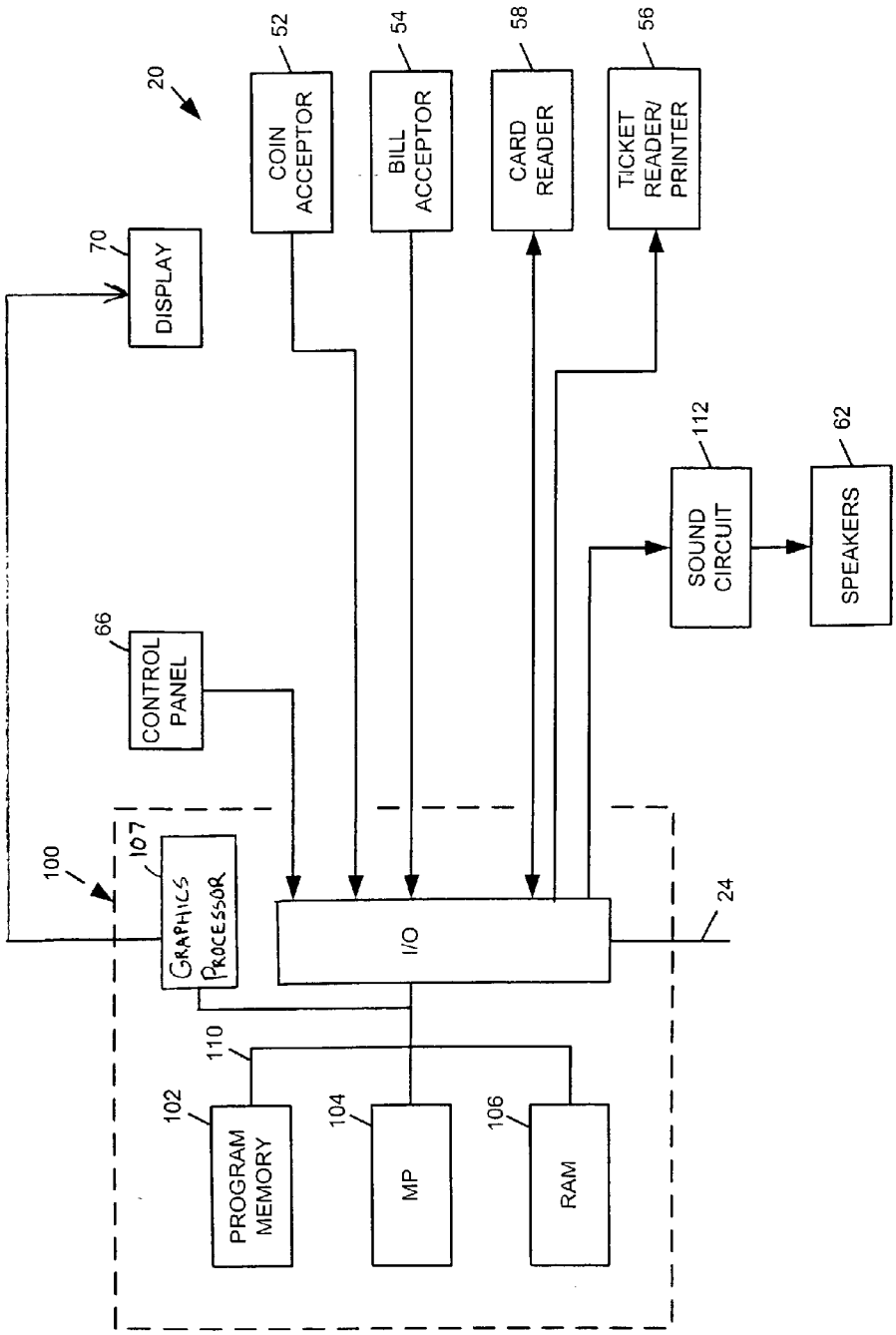
20
52
COIN ACCEPTOR
54
BILL ACCEPTOR
58
CARD READER
56
TICKET READER/ PRINTER
70
DISPLAY
112
SOUND CIRCUIT
62
SPEAKERS
66
CONTROL PANEL
100
107
GRAPHICS PROCESSOR
I/O
24
110
102
PROGRAM MEMORY
104
MP
106
RAM

FIG. 3