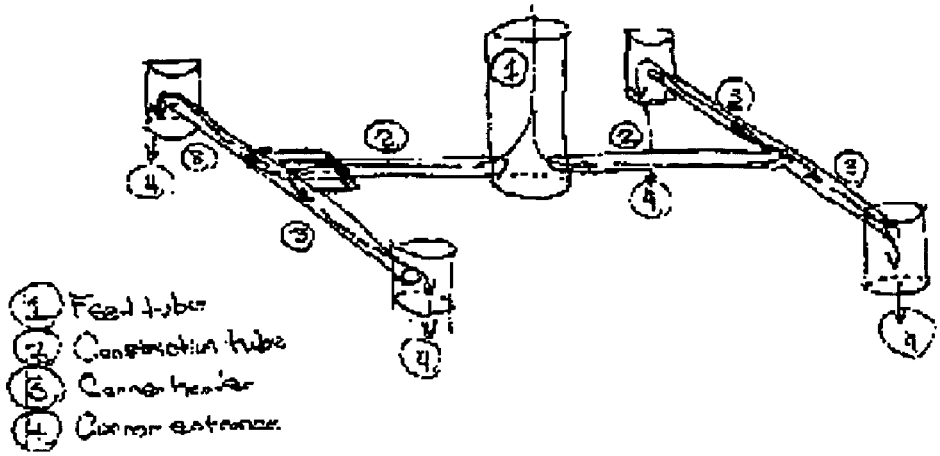
1 Feed tube
2 Condensation tube
3 Carrier heater
4 Carrier extension

Fig. 25

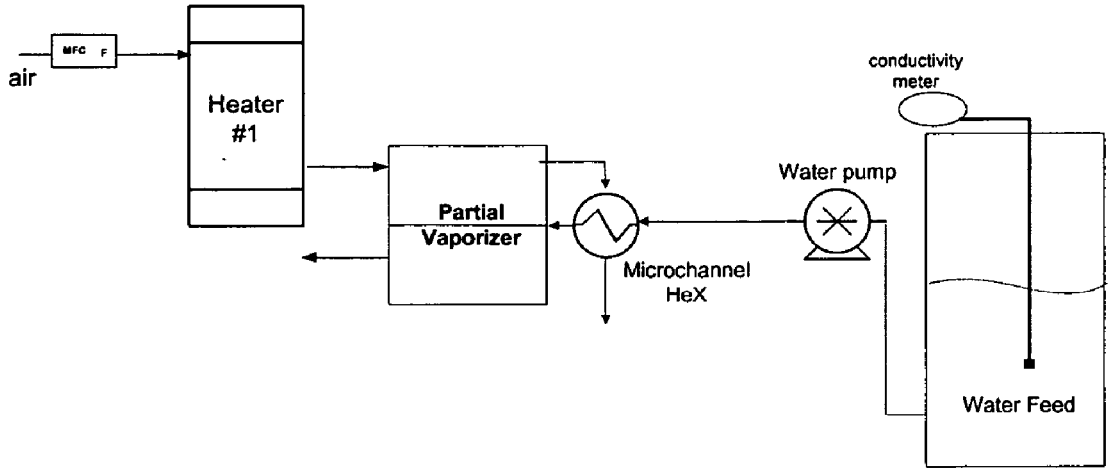
air
MFC F
Heater #1
Partial Vaporizer
Microchannel HeX
Water pump
conductivity meter
Water Feed

Fig. 26