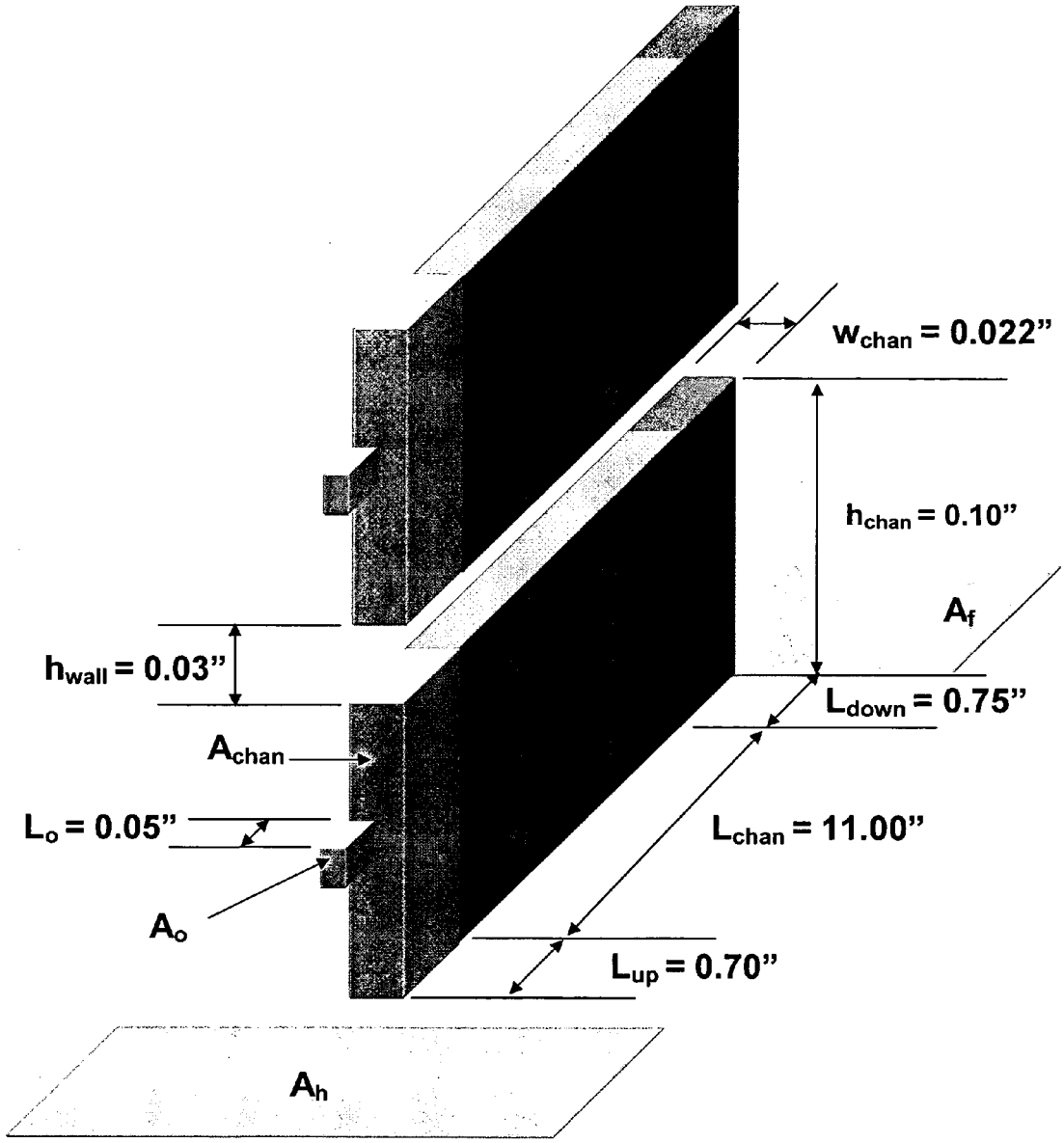
w_{chan} = 0.022"
h_{chan} = 0.10"
A_f
h_{wall} = 0.03"
L_{down} = 0.75"
A_{chan}
L_o = 0.05"
L_{chan} = 11.00"
A_o
L_{up} = 0.70"
A_h

Fig. 37