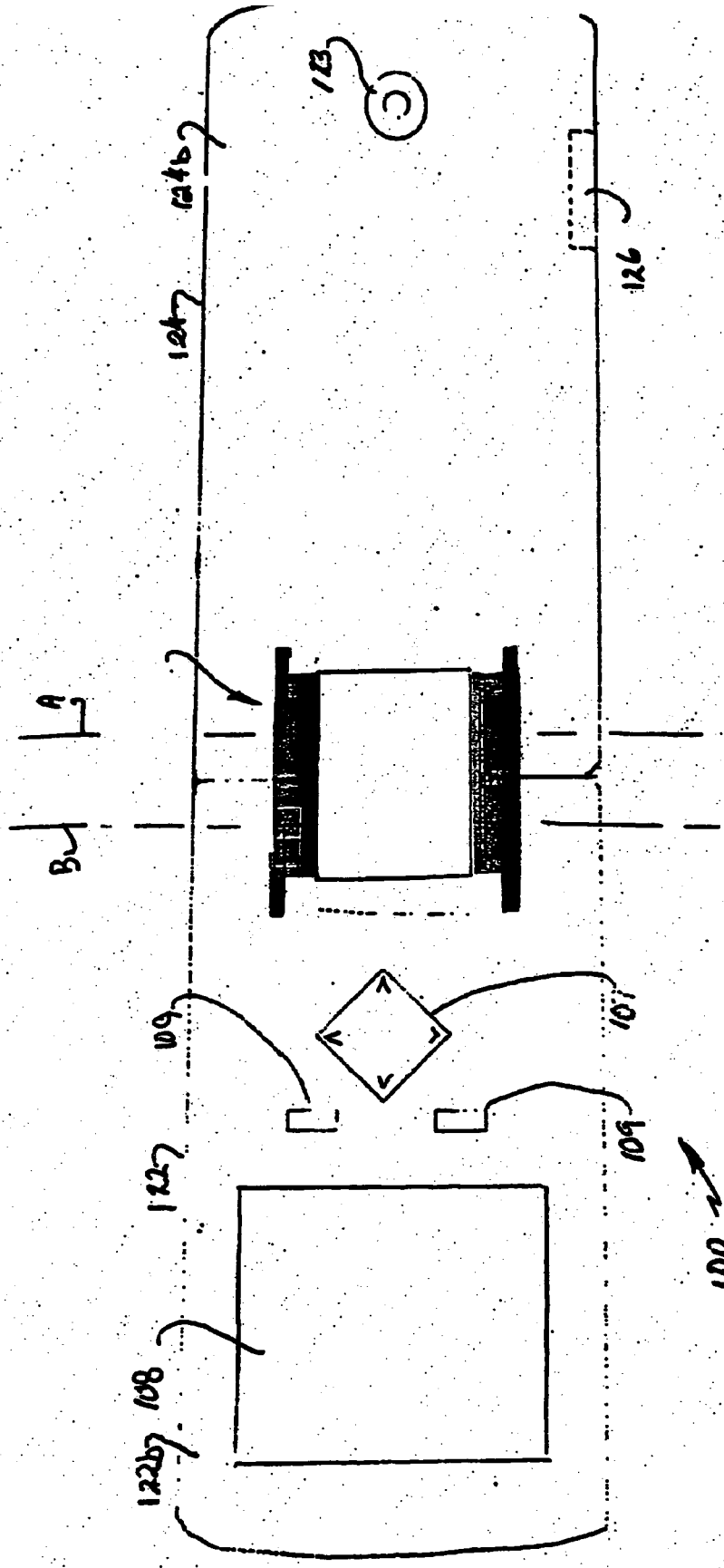

Figure 8