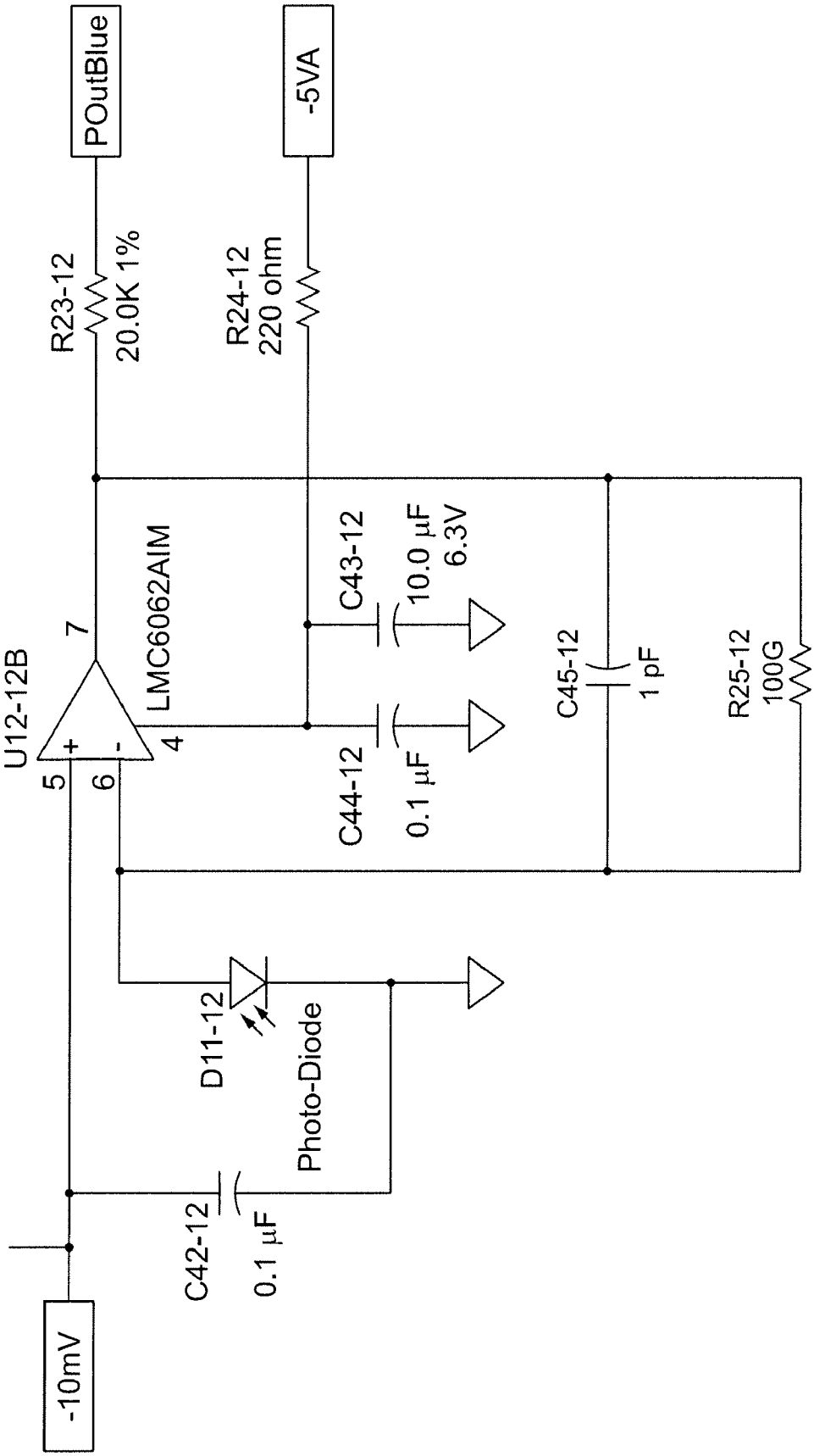
POutBlue
-5VA
R23-12
20.0K 1%
R24-12
220 ohm
U12-12B
7
LMC6062AIM
5
6
4
+
-
C43-12
10.0 µF
6.3V
C44-12
0.1 µF
C45-12
1 pF
R25-12
100G
D11-12
Photo-Diode
C42-12
0.1 µF
-10mV

FIG. 34