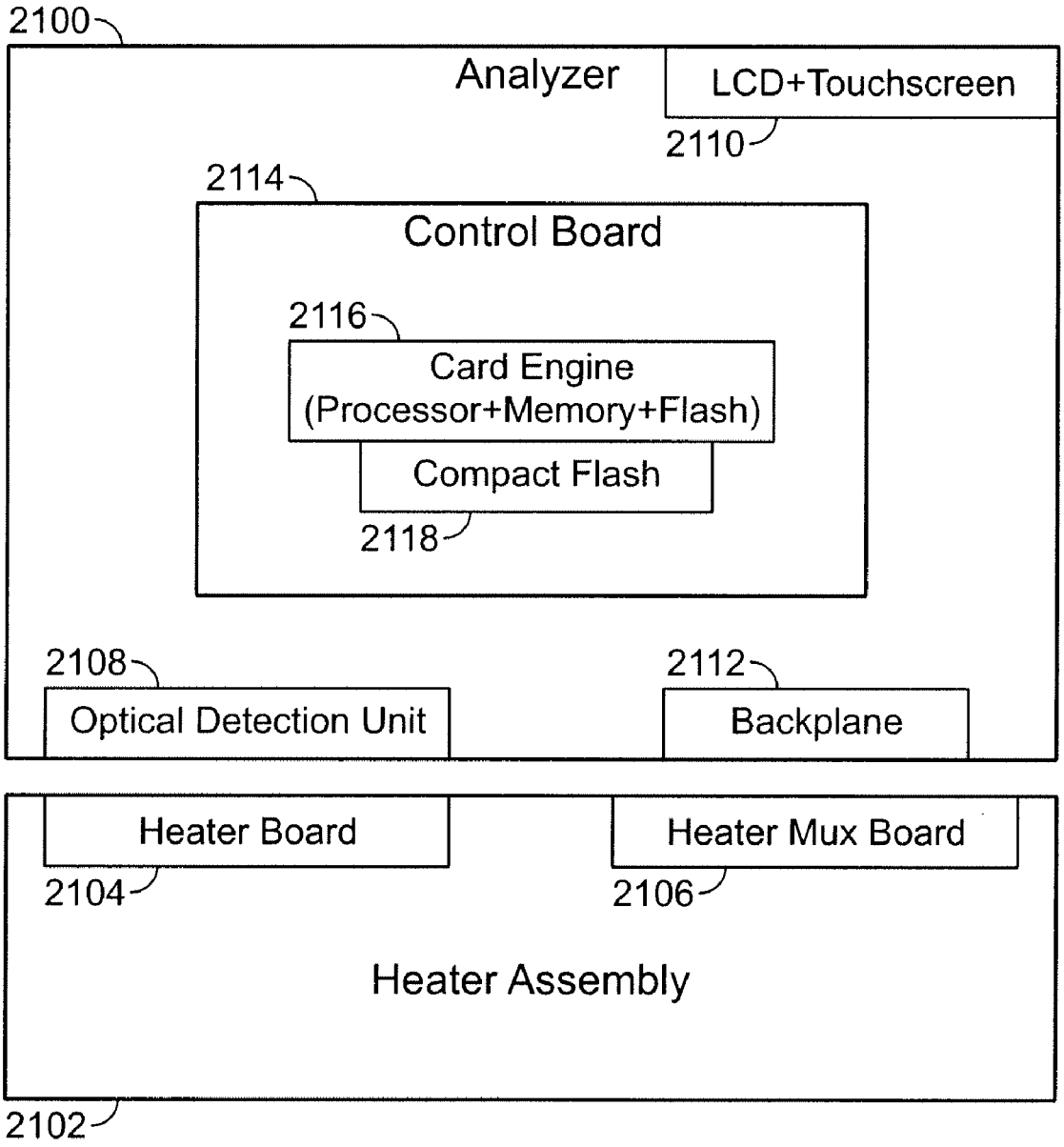
2100
Analyzer
LCD+Touchscreen
2110
2114
Control Board
2116
Card Engine
(Processor+Memory+Flash)
Compact Flash
2118
2108
Optical Detection Unit
2112
Backplane
Heater Board
2104
Heater Mux Board
2106
Heater Assembly
2102

FIG. 36