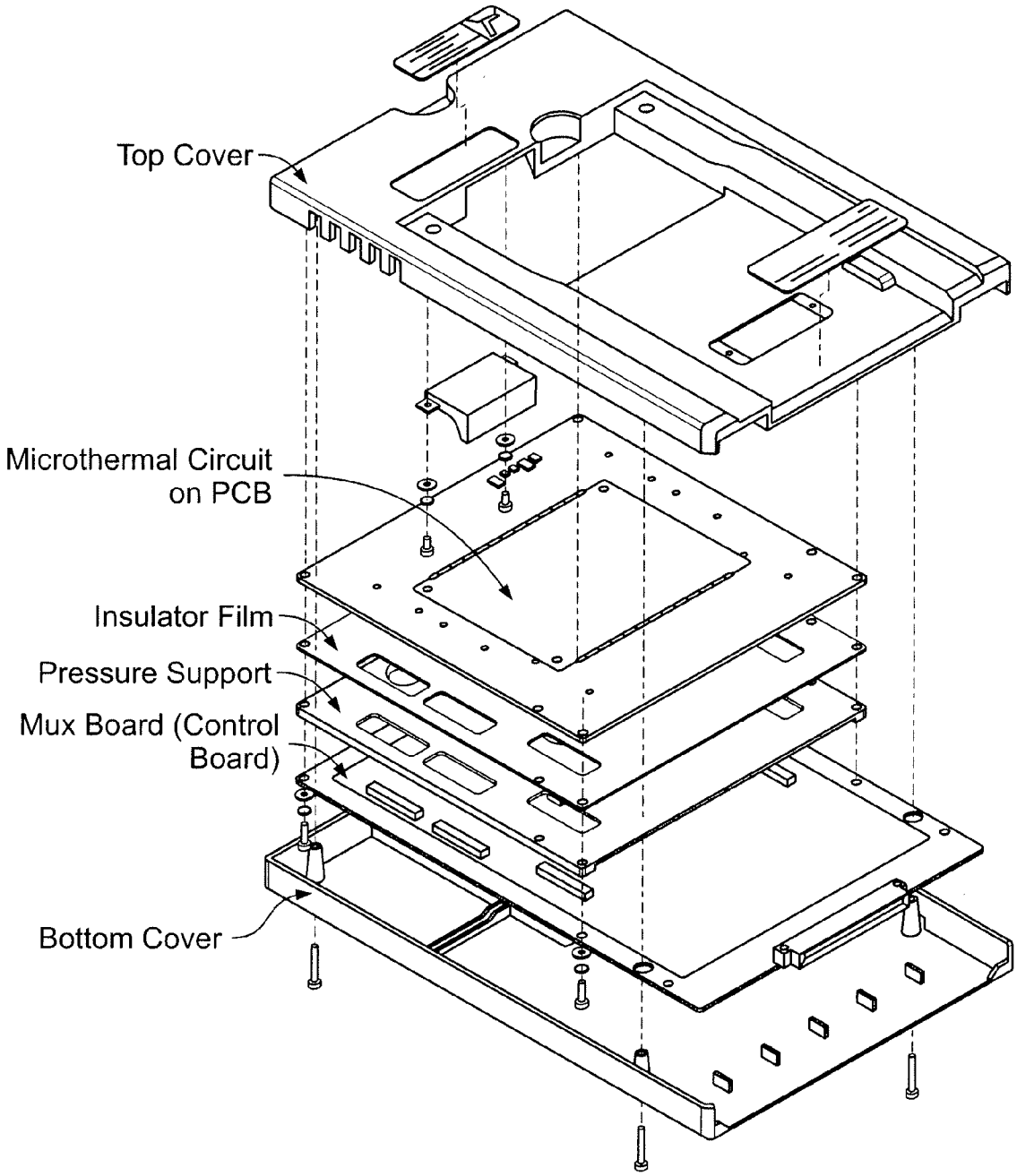
Top Cover
Microthermal Circuit on PCB
Insulator Film
Pressure Support
Mux Board (Control Board)
Bottom Cover

FIG. 42A