FIG. 1

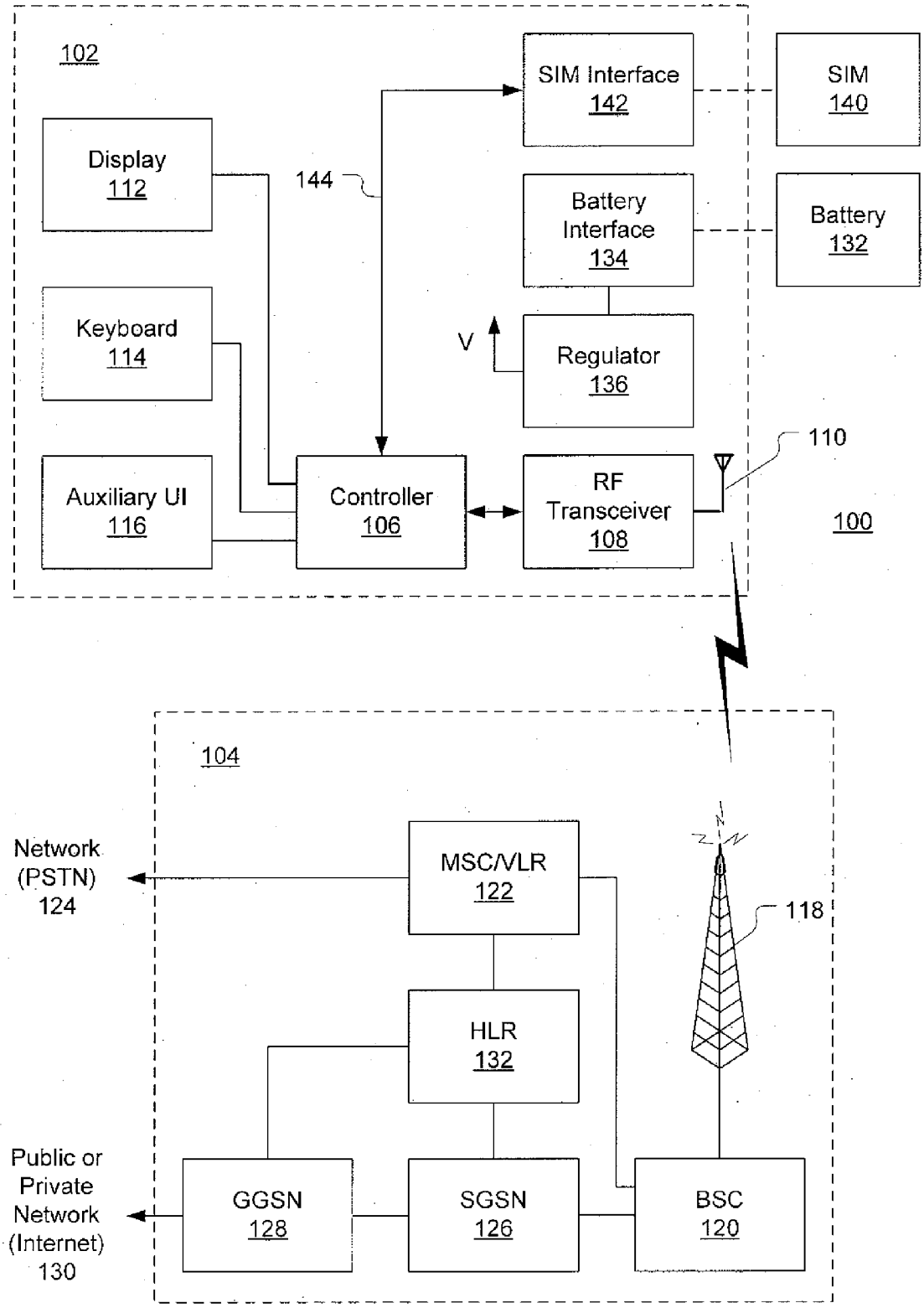
102
SIM Interface
142
SIM
140
Display
112
144
Battery
Interface
134
Battery
132
Keyboard
114
V
Regulator
136
110
Auxiliary UI
116
Controller
106
RF
Transceiver
108
100
104
Network
(PSTN)
124
MSC/VLR
122
118
HLR
132
Public or
Private
Network
(Internet)
130
GGSN
128
SGSN
126
BSC
120