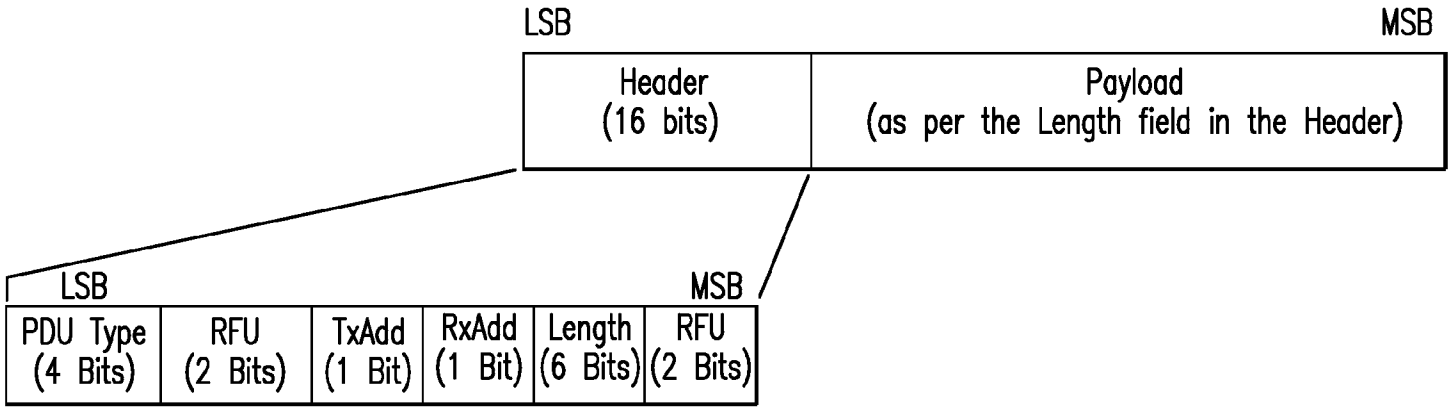

PDU Type $b_3 b_2 b_1 b_0$	Packet Name
0000	ADV_IND
0001	ADV_DIRECT_IND
0010	ADV_NONCONN_IND
0011	SCAN_REQ
0100	SCAN_RSP
0101	CONNECT_REQ
0110	ADV_SCAN_IND
0111–1111	Resened

Payload	
AdvA (6 octets)	AdvData (0–31 octets)

Figure 2.4: ADV_IND PDU Payload

Payload	
AdvA (6 octets)	AdvData (0–31 octets)

Figure 2.7: ADV_SCAN_IND PDU Payload

Payload	
ScanA (6 octets)	AdvA (6 octets)

Figure 2.8: SCAN_REQ PDU Payload

Payload	
AdvA (6 octets)	ScanRspData (0–31 octets)

Figure 2.9: SCAN_RSP PDU Payload

FIG. 2A