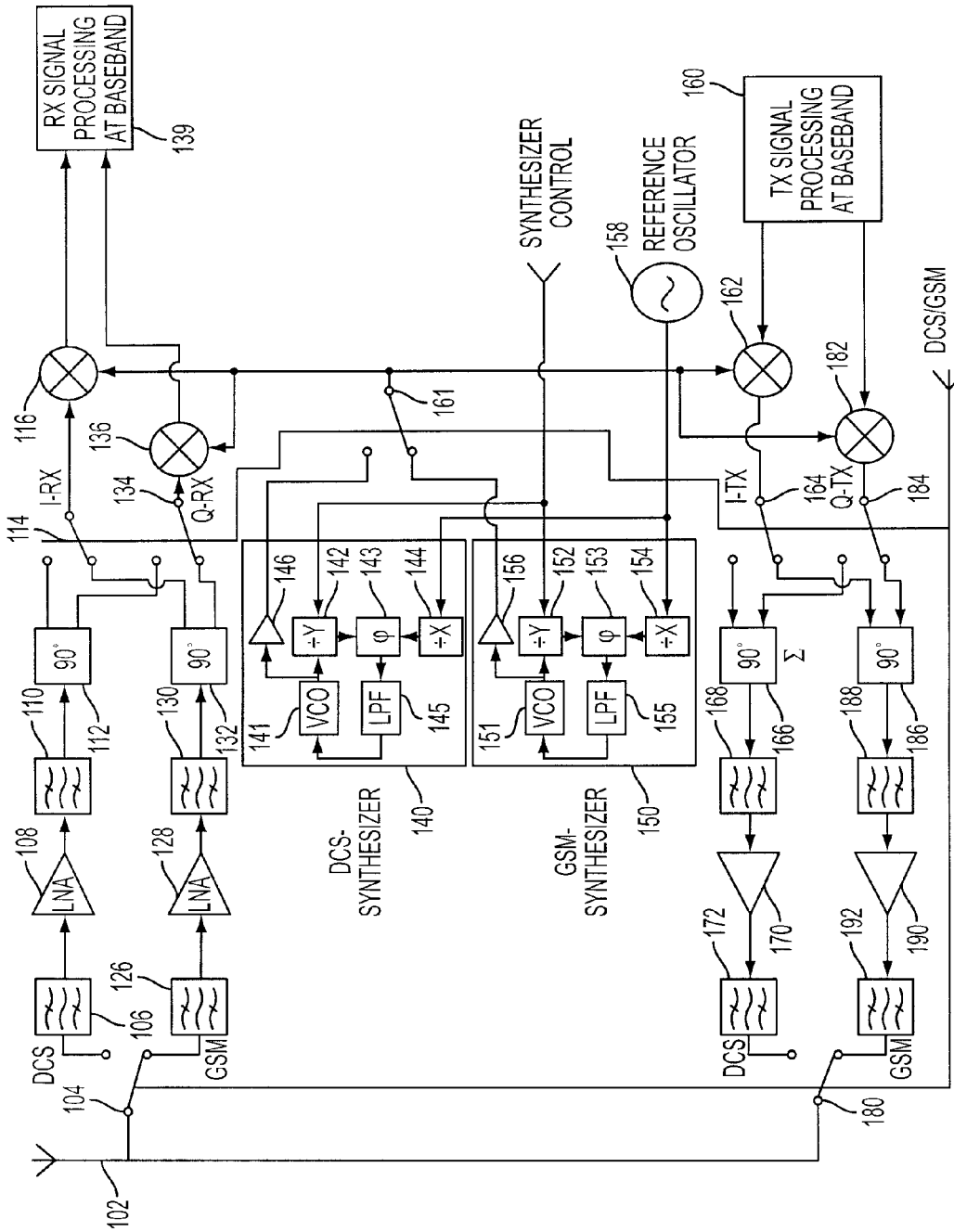
RX SIGNAL PROCESSING AT BASEBAND
139
SYNTHESIZER CONTROL
REFERENCE OSCILLATOR
158
TX SIGNAL PROCESSING AT BASEBAND
160
DCS/GSM SELECTION
116
136
161
162
182
I-RX
Q-RX
134
114
I-TX
164
Q-TX
184
90°
110
112
130
132
108
LNA
128
126
106
DCS
GSM
104
102
180
146
142
143
144
÷Y
φ
÷X
141
VCO
LPF
145
DCS-SYNTHESIZER
140
156
152
153
154
151
155
GSM-SYNTHESIZER
150
Σ
168
166
188
186
172
170
192
190

FIG. 1