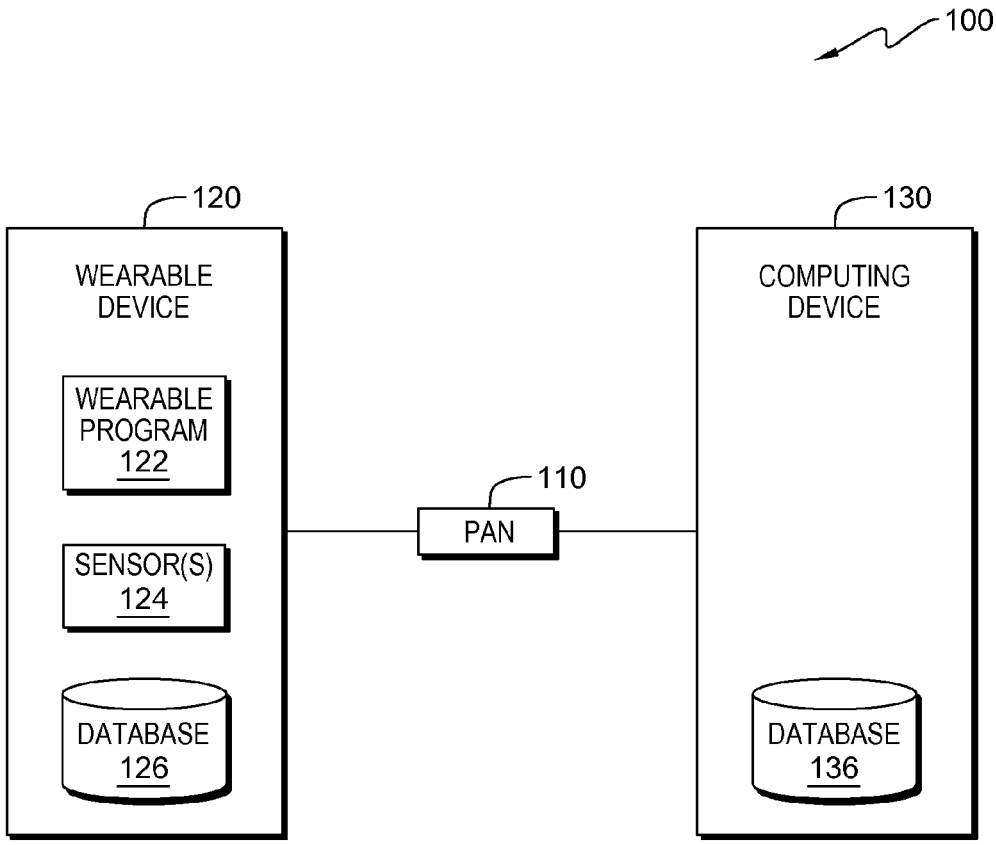
100
120
WEARABLE DEVICE
WEARABLE PROGRAM 122
SENSOR(S) 124
DATABASE 126
110
PAN
130
COMPUTING DEVICE
DATABASE 136

FIG. 1