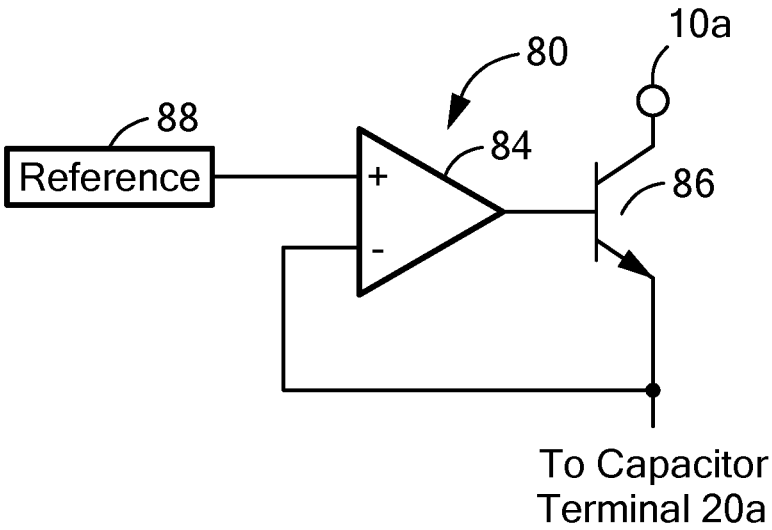
10a
80
88
84
Reference
+
-
86
To Capacitor
Terminal 20a

FIG. 3

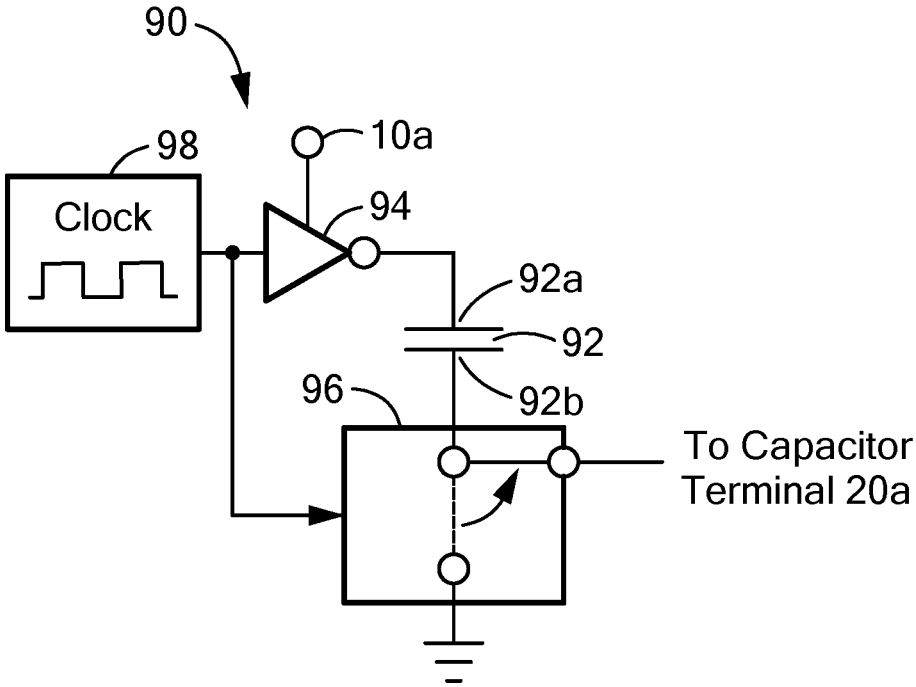
90
98
10a
Clock
94
92a
92
96
92b
To Capacitor
Terminal 20a

FIG. 3A