FIG. 5

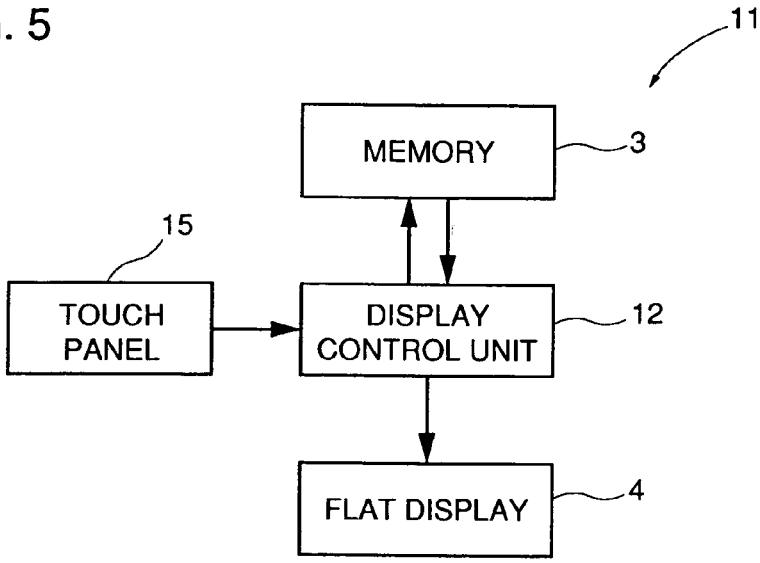
11
MEMORY
3
15
TOUCH PANEL
DISPLAY CONTROL UNIT
12
FLAT DISPLAY
4

FIG. 6

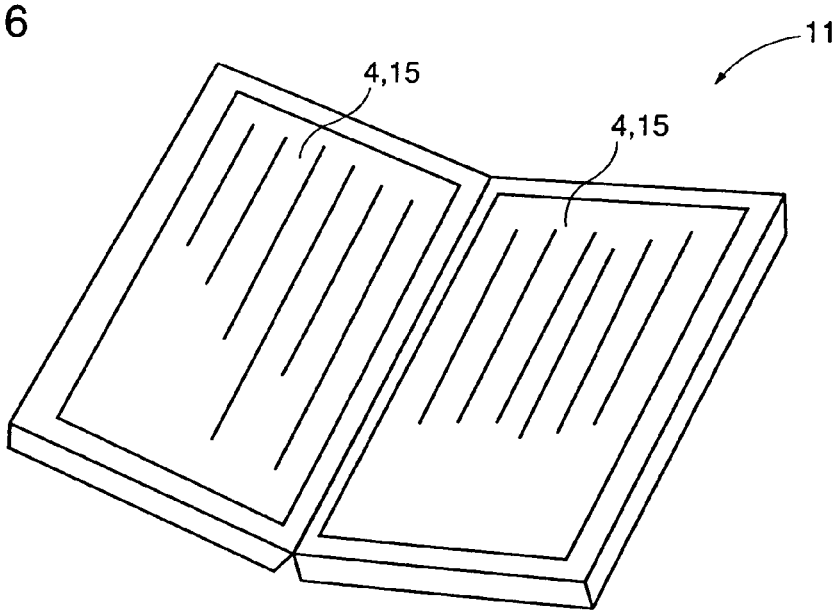
11
4,15
4,15