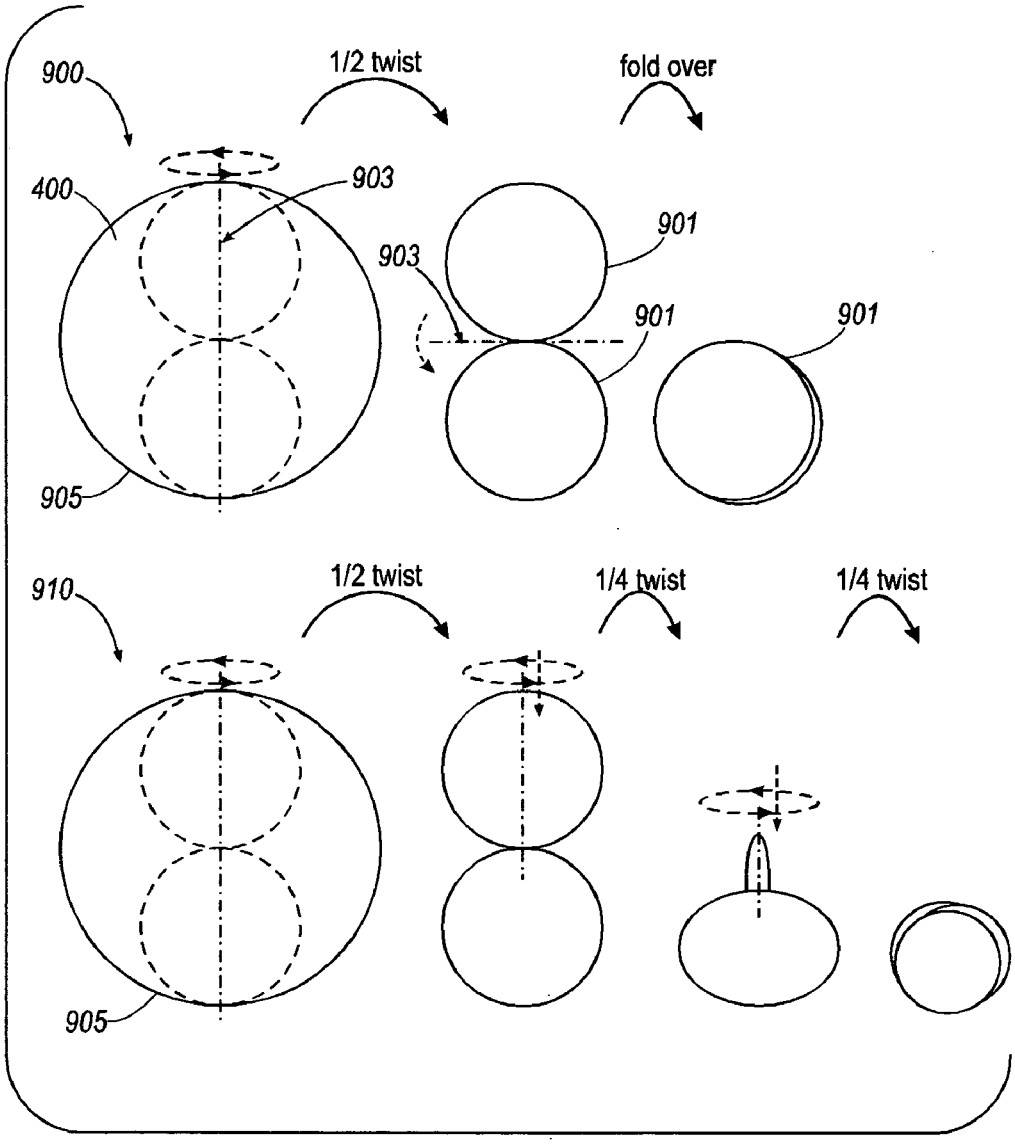
900
1/2 twist
fold over
400
903
901
903
901
901
905
910
1/2 twist
1/4 twist
1/4 twist
905

FIG. 12