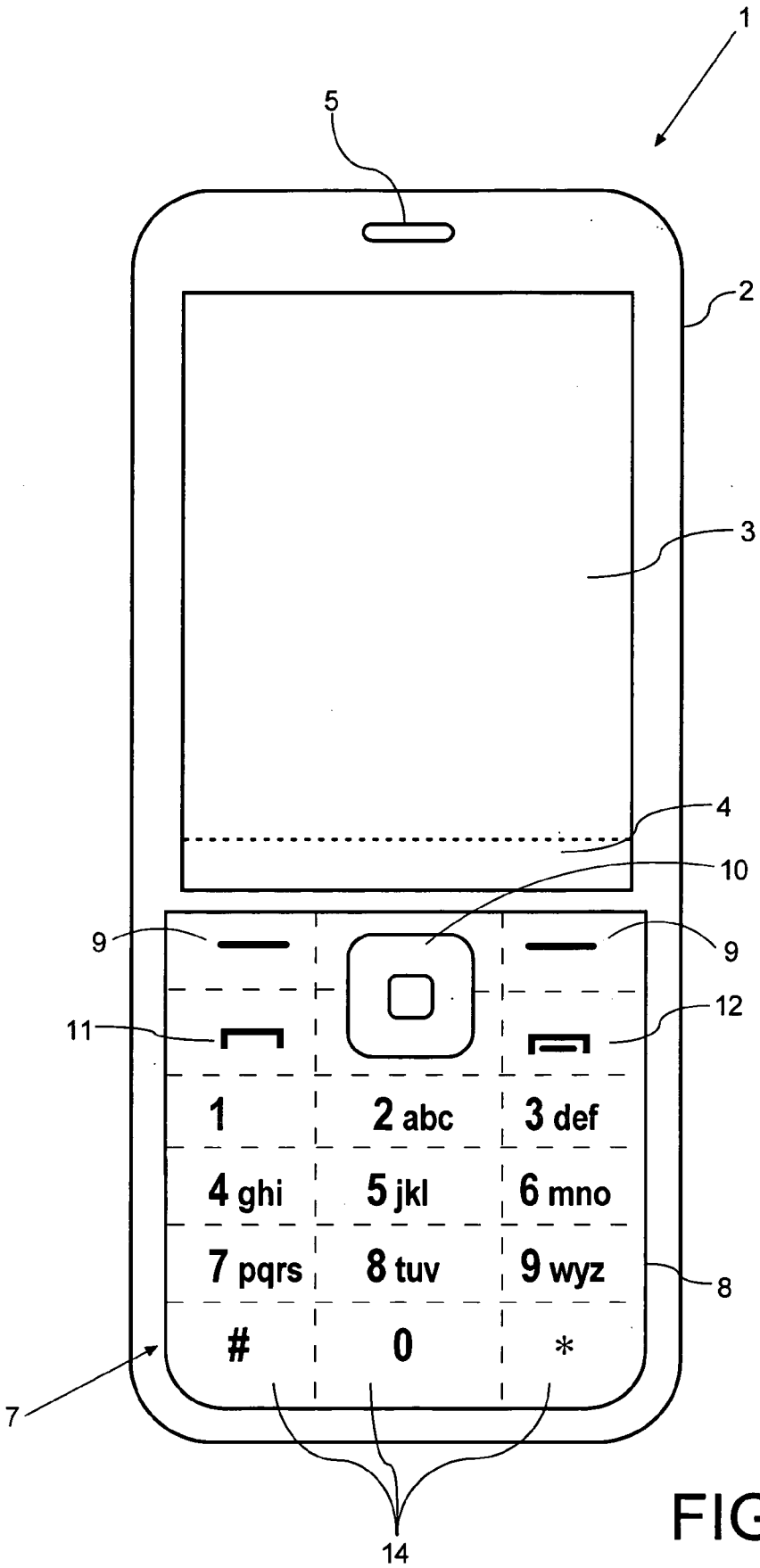
1
5
2
3
4
10
9
9
11
12
1
2 abc
3 def
4 ghi
5 jkl
6 mno
7 pqrs
8 tuv
9 wyz
#
0
*
8
7
14

FIG. 1