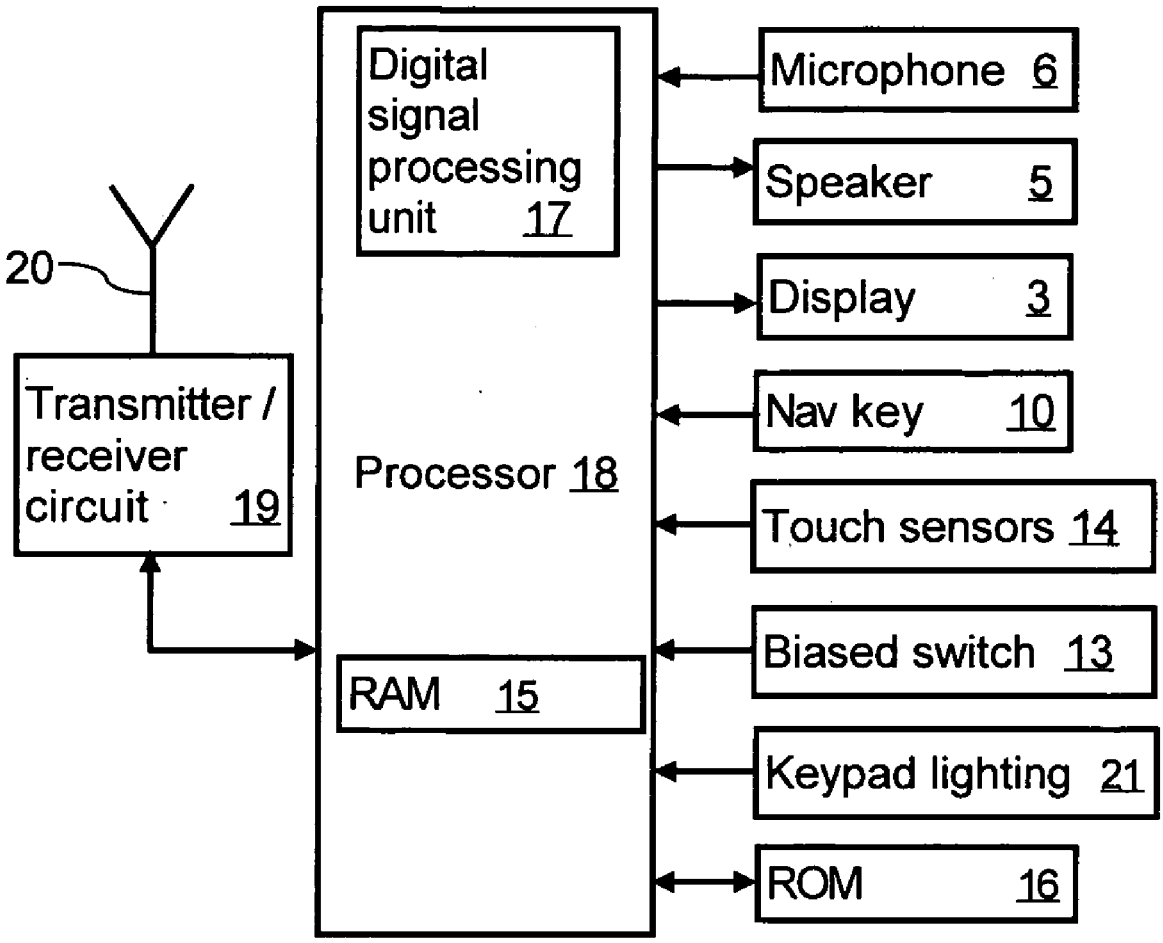
Digital signal processing unit 17
Processor 18
RAM 15
20
Transmitter / receiver circuit 19
Microphone 6
Speaker 5
Display 3
Nav key 10
Touch sensors 14
Biased switch 13
Keypad lighting 21
ROM 16

FIG. 13