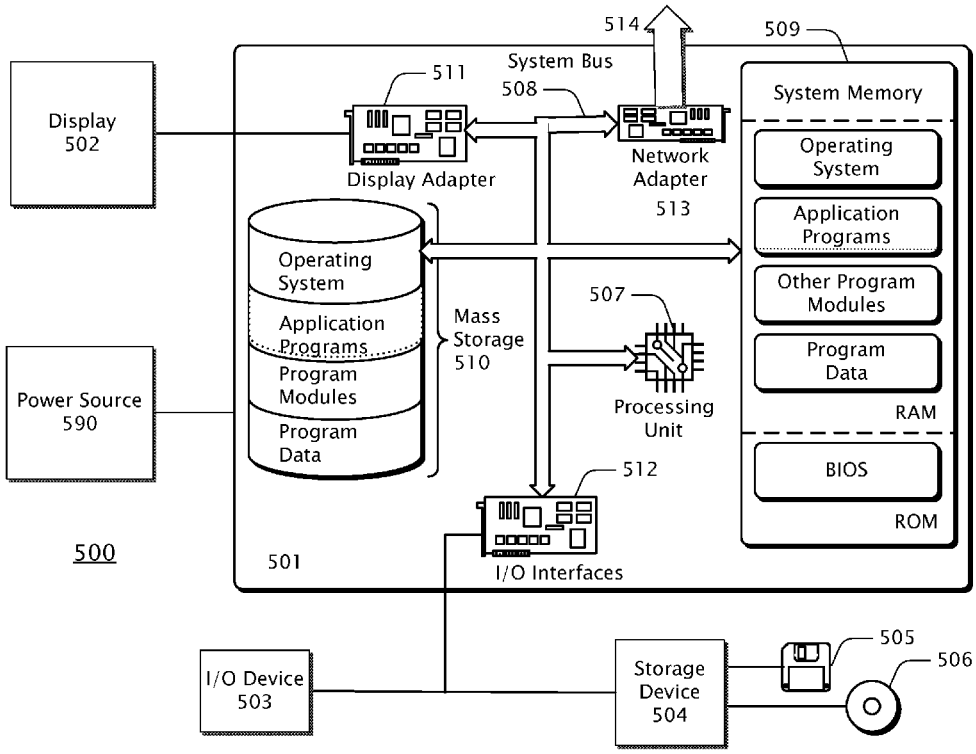
514
509
System Bus
511
508
System Memory
Display
502
Display Adapter
Network
Adapter
513
Operating
System
Application
Programs
Other Program
Modules
Program
Data
RAM
Operating
System
Application
Programs
Program
Modules
Program
Data
Mass
Storage
510
507
Processing
Unit
Power Source
590
512
BIOS
ROM
500
501
I/O Interfaces
505
506
I/O Device
503
Storage
Device
504

FIG. 5