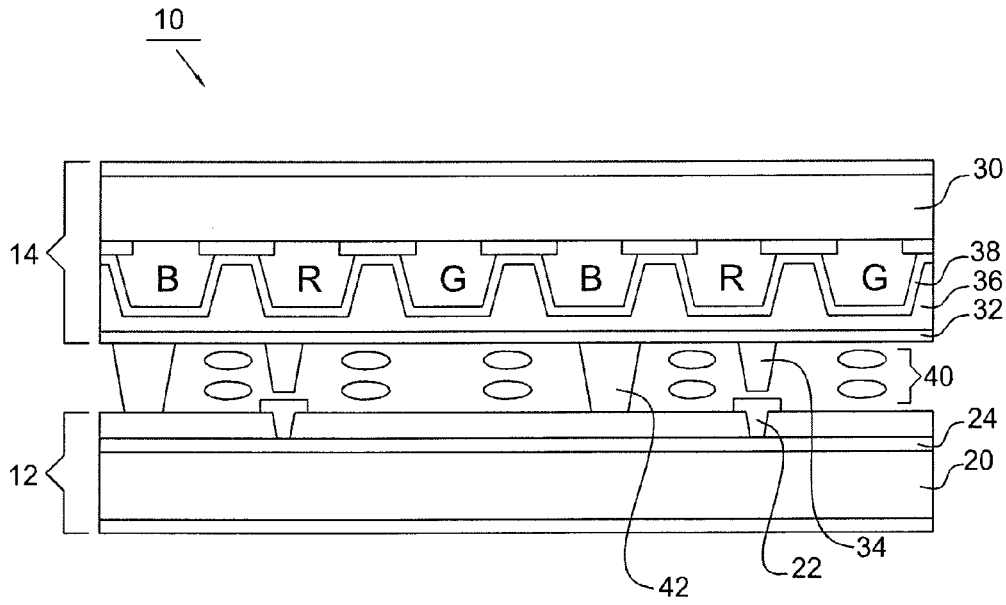

FIG.2 (PRIOR ART)