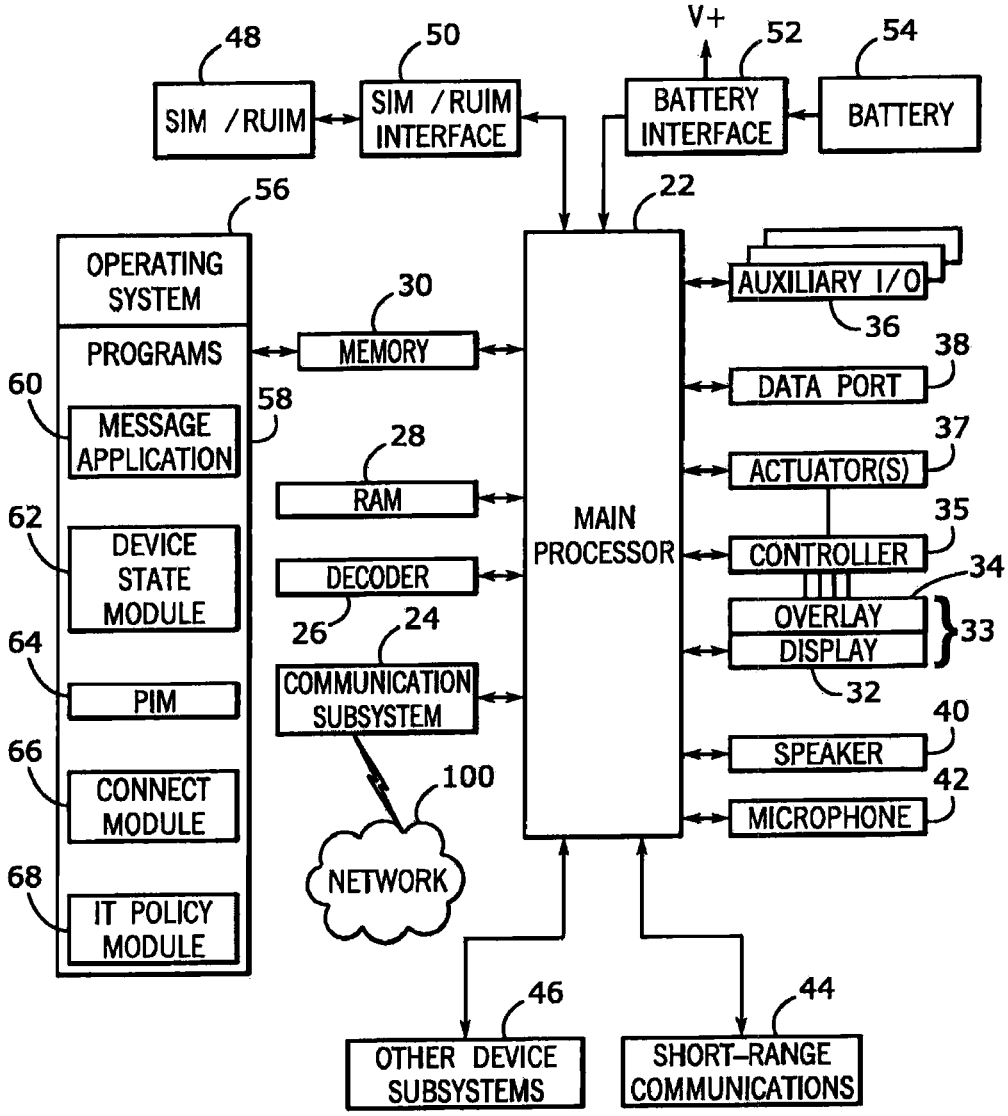
48
SIM /RUIM
50
SIM /RUIM INTERFACE
V+
52
BATTERY INTERFACE
54
BATTERY
56
OPERATING SYSTEM
PROGRAMS
60
MESSAGE APPLICATION
58
62
DEVICE STATE MODULE
64
PIM
66
CONNECT MODULE
68
IT POLICY MODULE
30
MEMORY
28
RAM
DECODER
26
24
COMMUNICATION SUBSYSTEM
100
NETWORK
22
MAIN PROCESSOR
AUXILIARY I/O
36
38
DATA PORT
37
ACTUATOR(S)
35
CONTROLLER
34
OVERLAY
DISPLAY
33
32
40
SPEAKER
42
MICROPHONE
46
OTHER DEVICE SUBSYSTEMS
44
SHORT-RANGE COMMUNICATIONS

FIG. 1