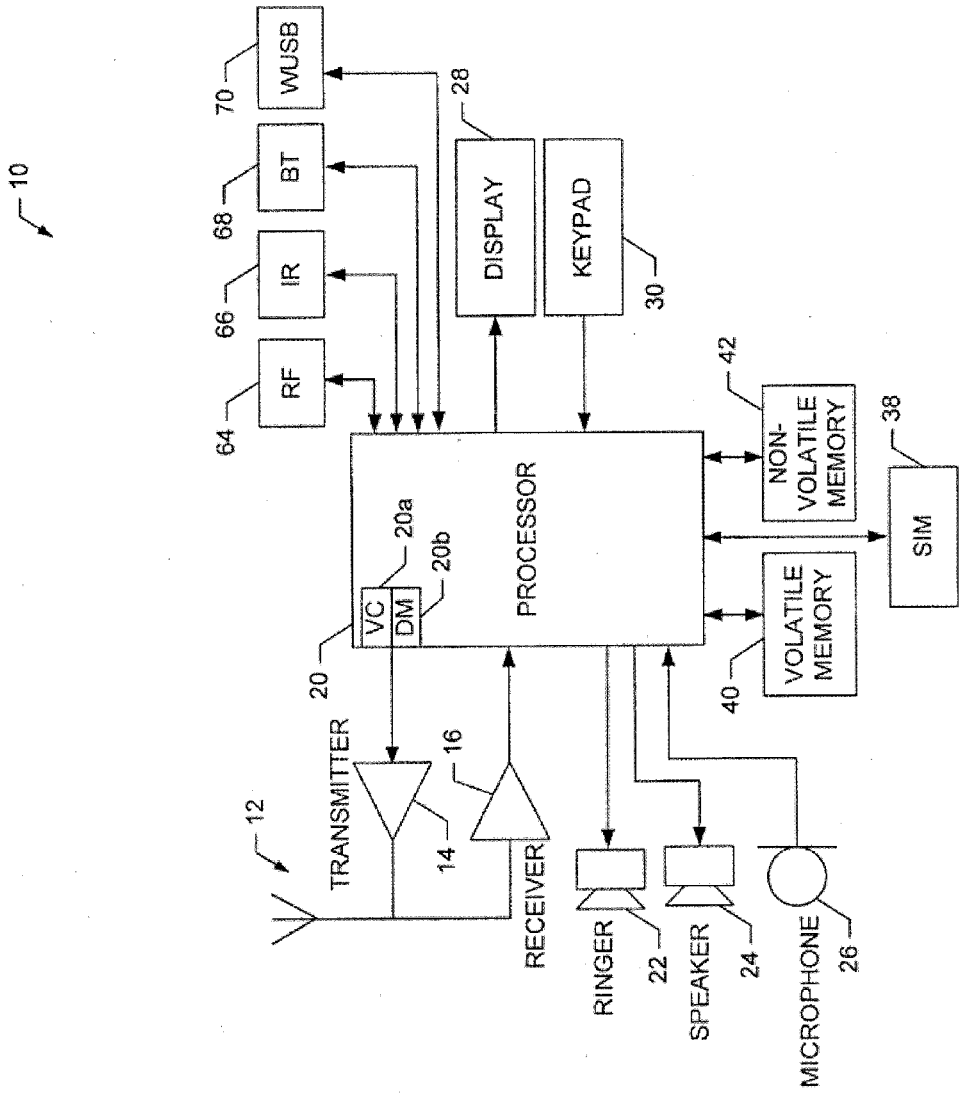
10
12
TRANSMITTER
14
16
RECEIVER
20
VC
DM
20a
20b
PROCESSOR
64
RF
66
IR
68
BT
70
WUSB
28
DISPLAY
KEYPAD
30
42
NON-VOLATILE MEMORY
38
SIM
40
VOLATILE MEMORY
RINGER
22
SPEAKER
24
MICROPHONE
26

FIG. 5