FIG. 12

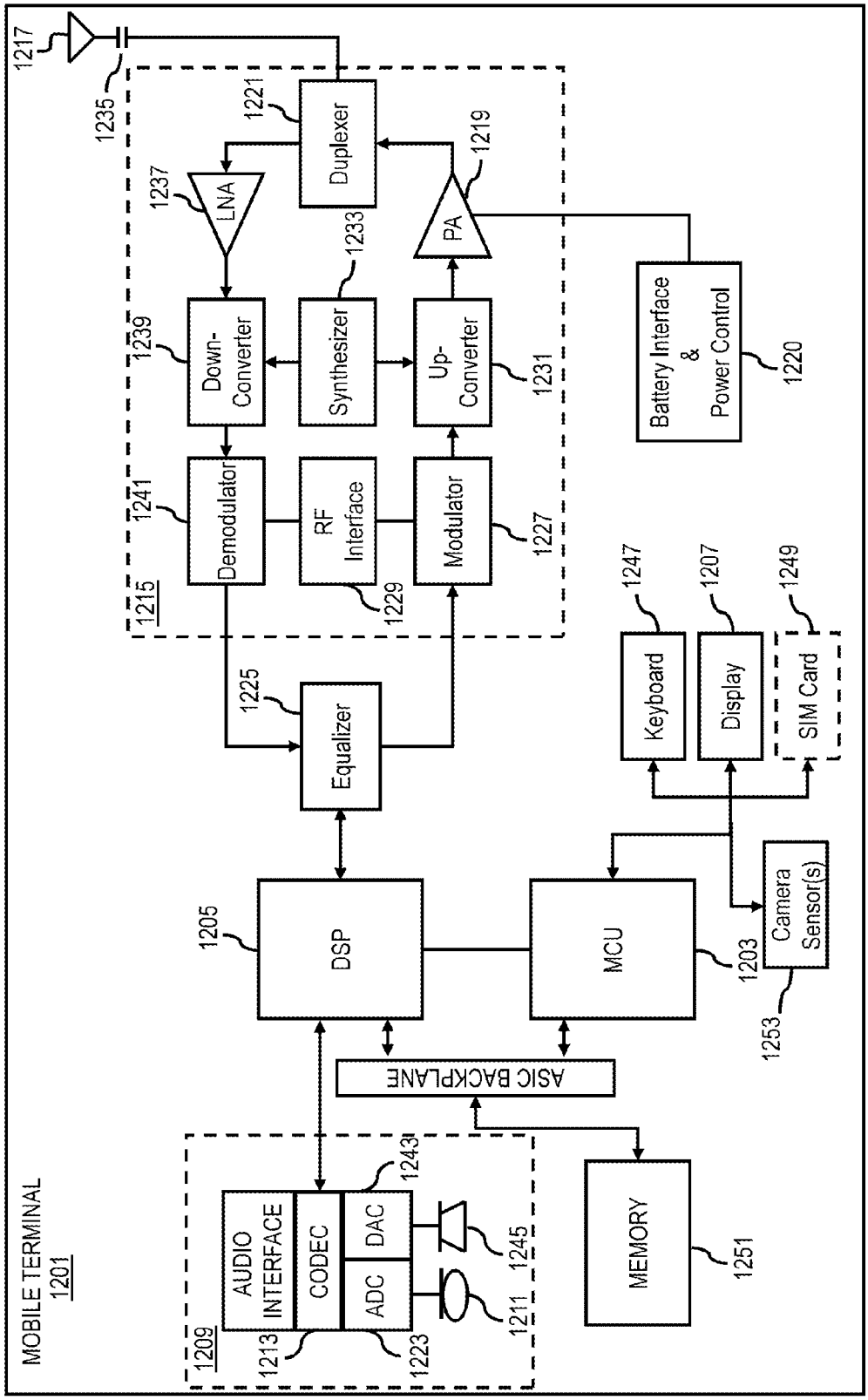
MOBILE TERMINAL
1201
1217
1235
1221
Duplexer
1237
LNA
1219
PA
1233
Synthesizer
1239
Down-Converter
Up-Converter
1231
Battery Interface & Power Control
1220
1241
Demodulator
RF Interface
Modulator
1227
1215
1229
1225
Equalizer
1247
Keyboard
1207
Display
1249
SIM Card
1205
DSP
MCU
1203
Camera Sensor(s)
1253
ASIC BACKPLANE
1209
AUDIO INTERFACE
CODEC
DAC
ADC
1243
1245
1211
1213
1223
MEMORY
1251