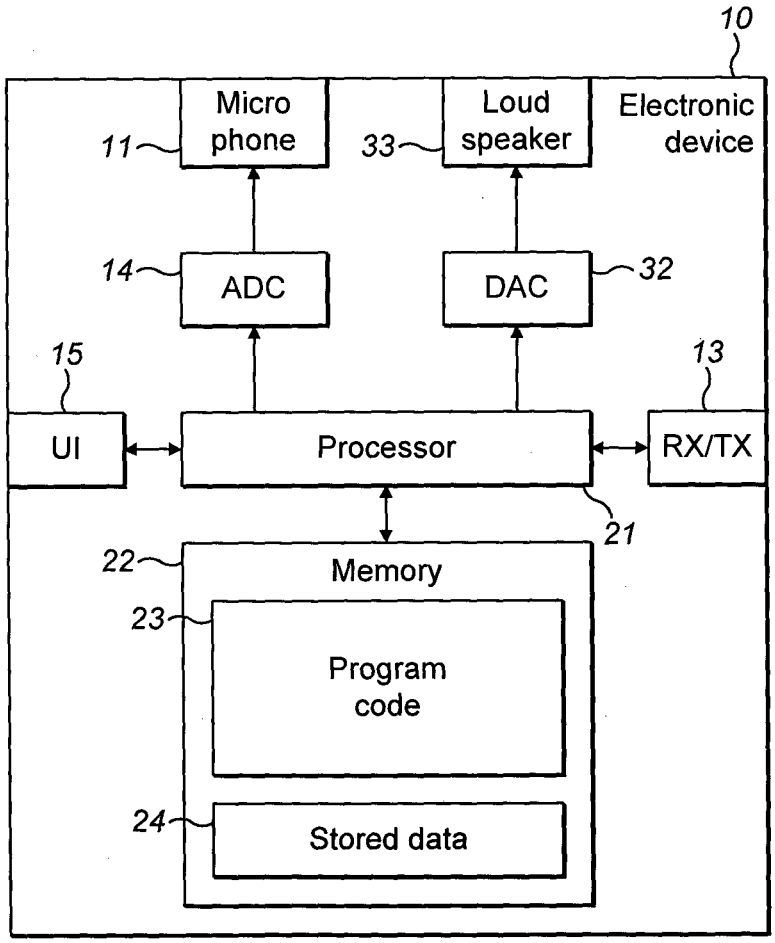
10
Electronic device
Micro phone
11
Loud speaker
33
ADC
14
DAC
32
15
13
UI
Processor
RX/TX
21
22
Memory
23
Program code
24
Stored data

FIG. 1