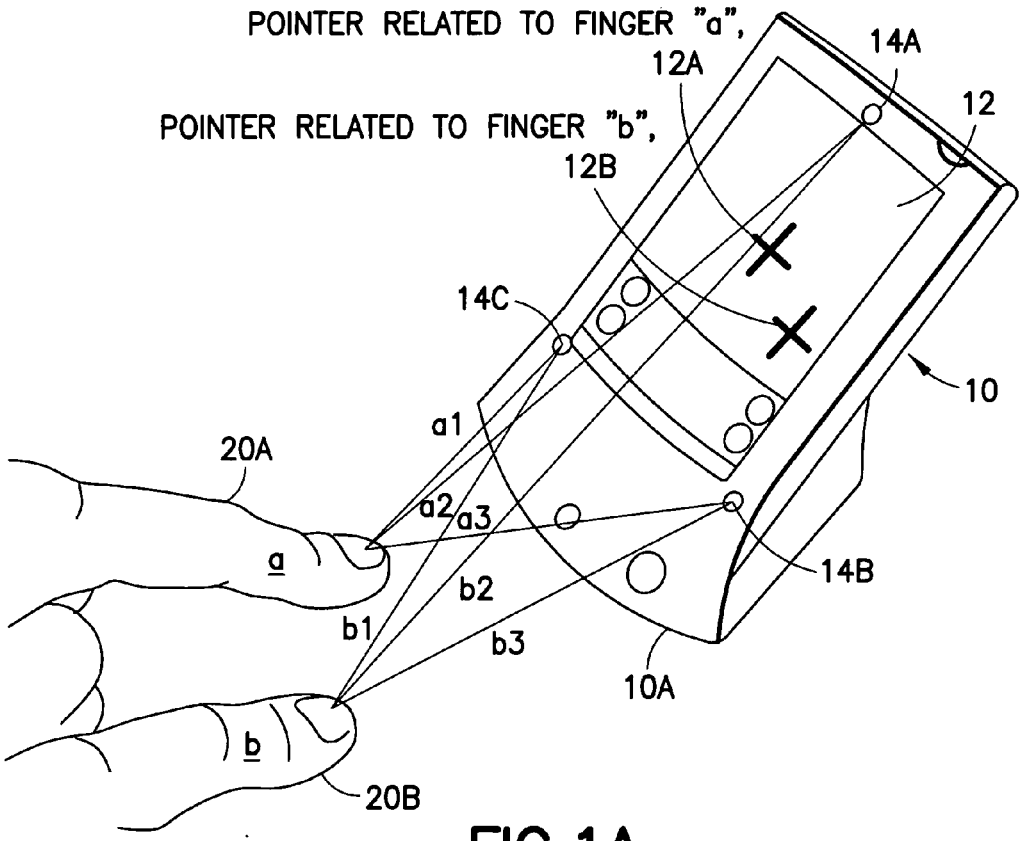
POINTER RELATED TO FINGER "a",
POINTER RELATED TO FINGER "b",
12A
14A
12
12B
14C
10
a1
20A
a2
a3
a
14B
b2
b1
b3
10A
b
20B

FIG.1A

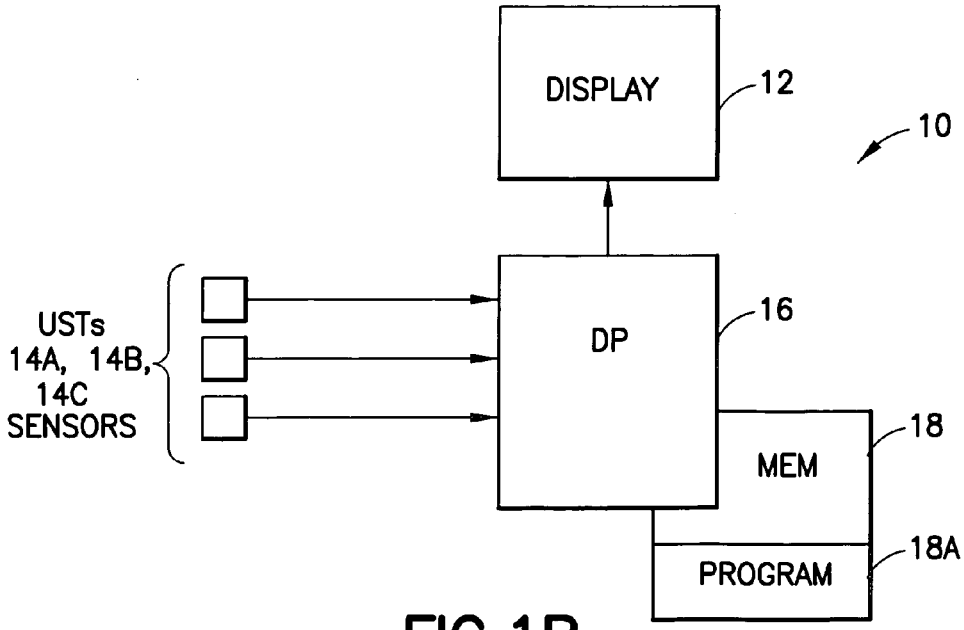
DISPLAY
12
10
USTs
14A, 14B,
14C
SENSORS
DP
16
MEM
18
PROGRAM
18A

FIG.1B