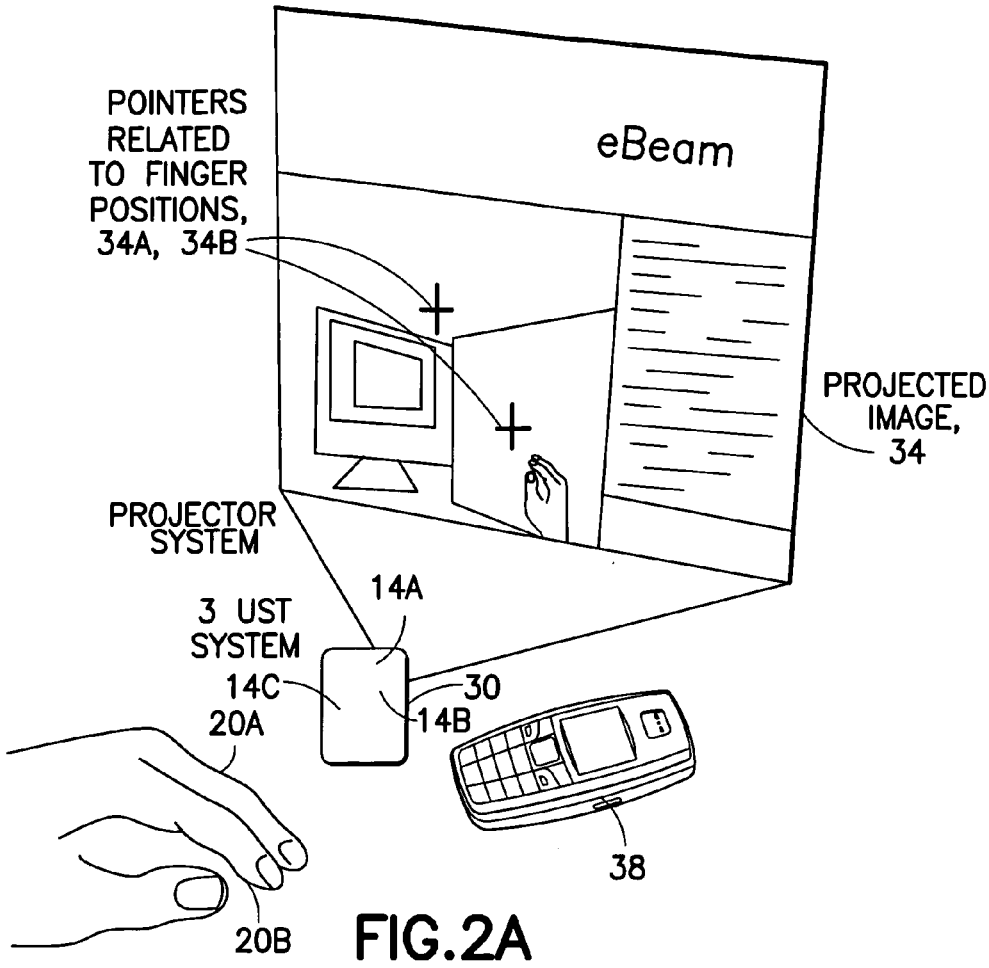
POINTERS RELATED TO FINGER POSITIONS, 34A, 34B
eBeam
PROJECTED IMAGE, 34
PROJECTOR SYSTEM
14A
3 UST SYSTEM
14C
30
14B
20A
38
20B

FIG.2A

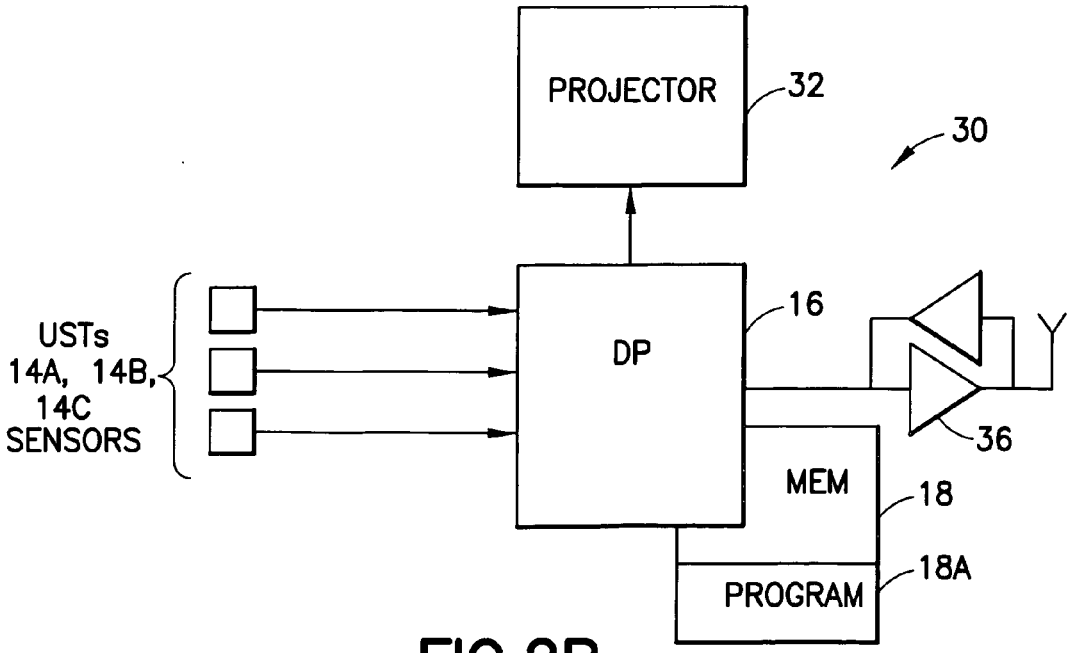
PROJECTOR
32
30
USTs 14A, 14B, 14C SENSORS
DP
16
36
MEM
18
PROGRAM
18A

FIG.2B