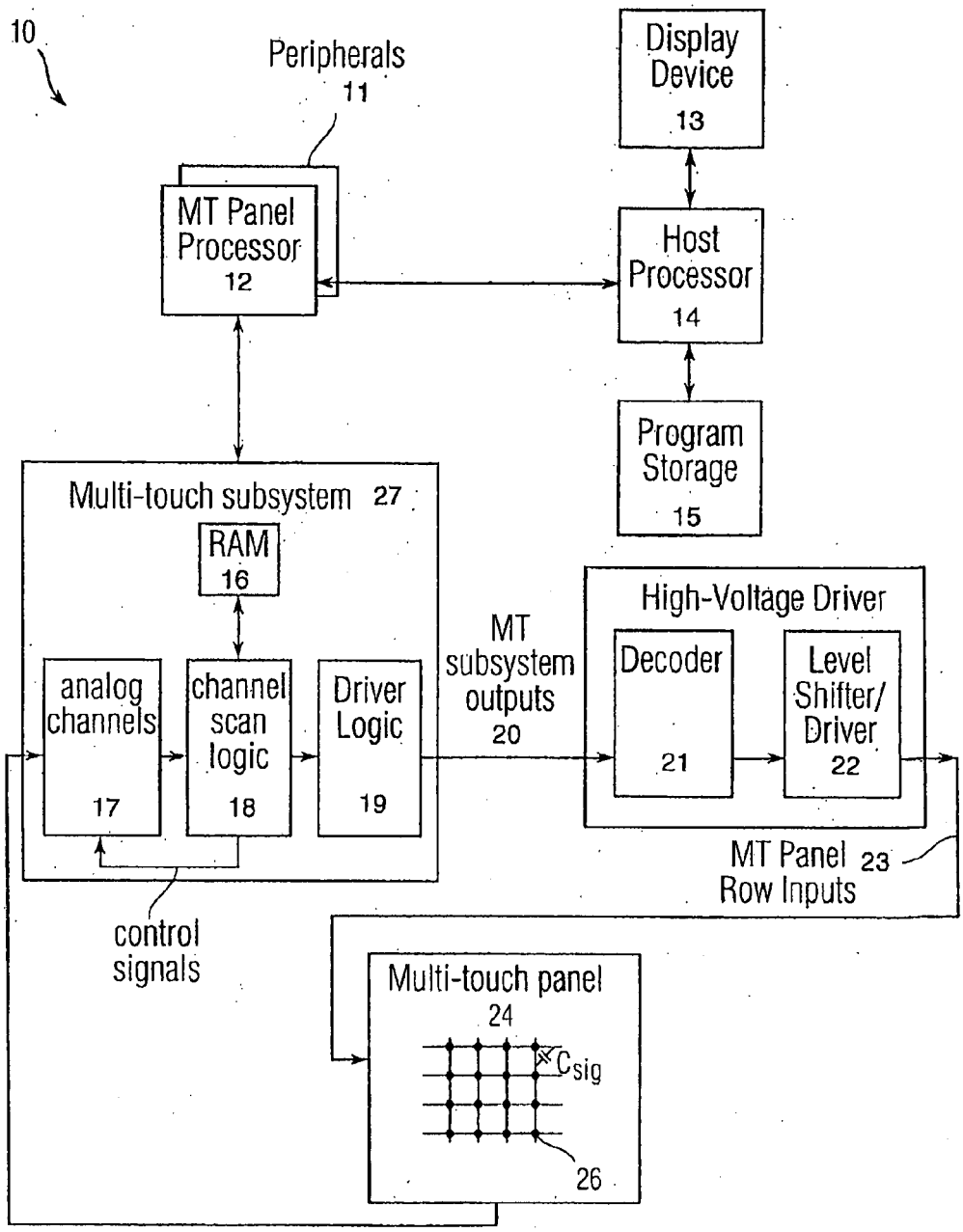
10
Peripherals
11
Display Device
13
MT Panel Processor
12
Host Processor
14
Program Storage
15
Multi-touch subsystem 27
RAM
16
analog channels
17
channel scan logic
18
Driver Logic
19
MT subsystem outputs
20
High-Voltage Driver
Decoder
21
Level Shifter/ Driver
22
MT Panel 23
Row Inputs
control signals
Multi-touch panel
24
Csig
26

Fig. 2