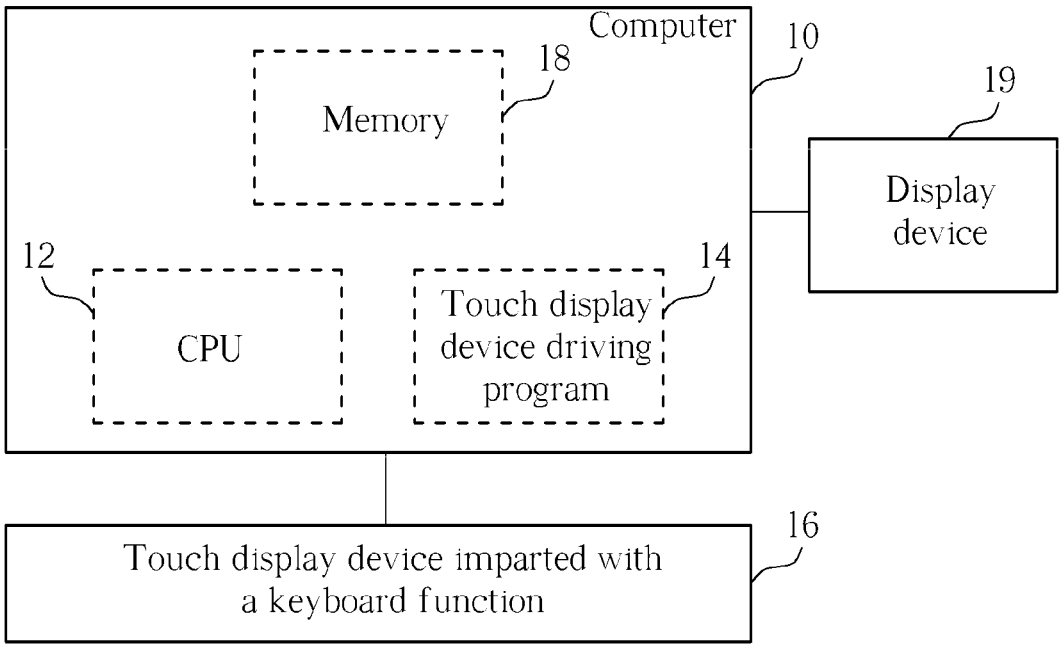
Computer
10
18
Memory
19
Display device
12
CPU
14
Touch display device driving program
16
Touch display device imparted with a keyboard function

FIG. 1