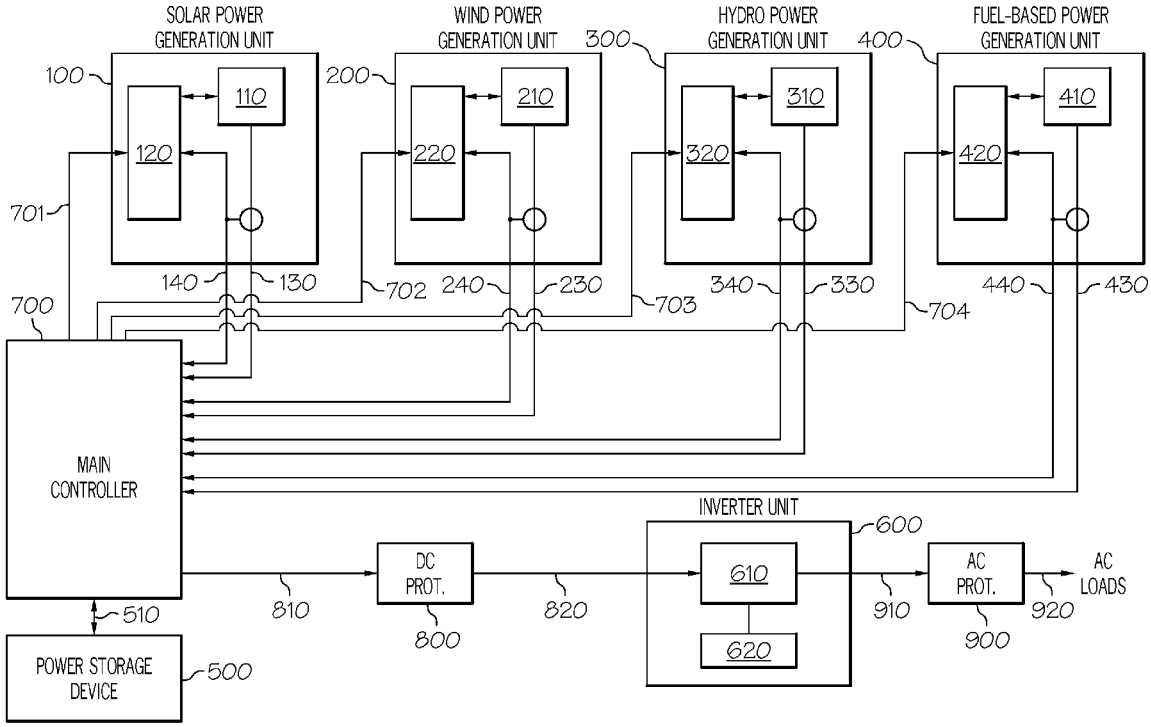
SOLAR POWER GENERATION UNIT
WIND POWER GENERATION UNIT
HYDRO POWER GENERATION UNIT
FUEL-BASED POWER GENERATION UNIT
100
200
300
400
110
120
210
220
310
320
410
420
701
702
703
704
140
130
240
230
340
330
440
430
700
MAIN CONTROLLER
INVERTER UNIT
600
610
620
DC PROT.
AC PROT.
AC LOADS
810
820
910
920
800
900
510
POWER STORAGE DEVICE
500

FIG. 1