FIG. 9

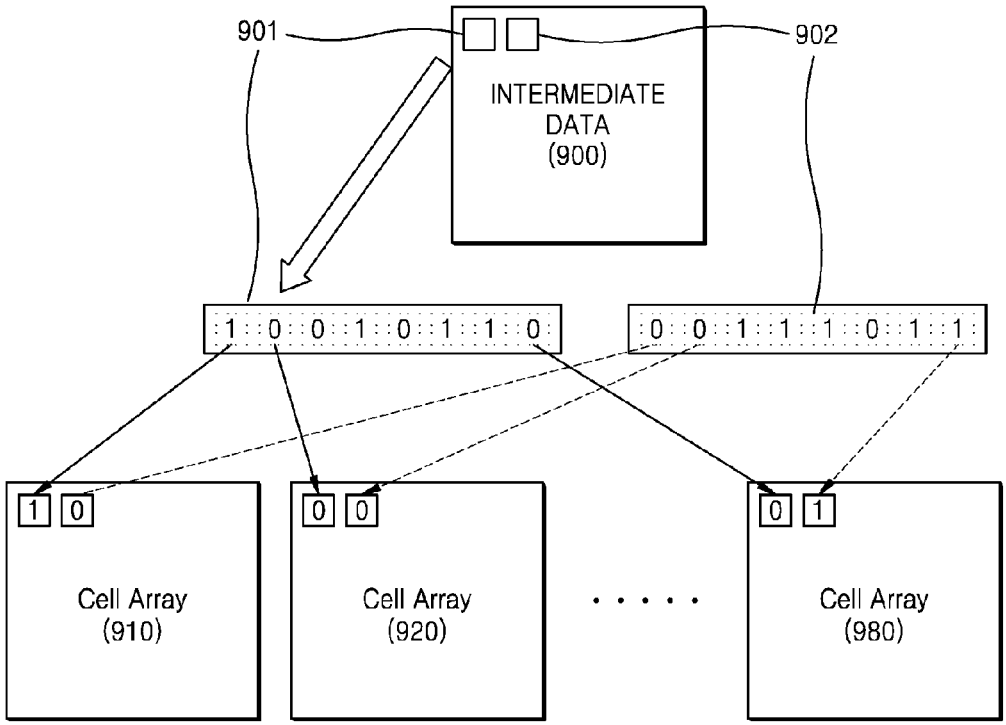
901
902
INTERMEDIATE DATA (900)
1 0 0 1 0 1 1 0
0 0 1 1 1 0 1 1
1 0
0 0
0 1
Cell Array (910)
Cell Array (920)
Cell Array (980)