FIG. 5

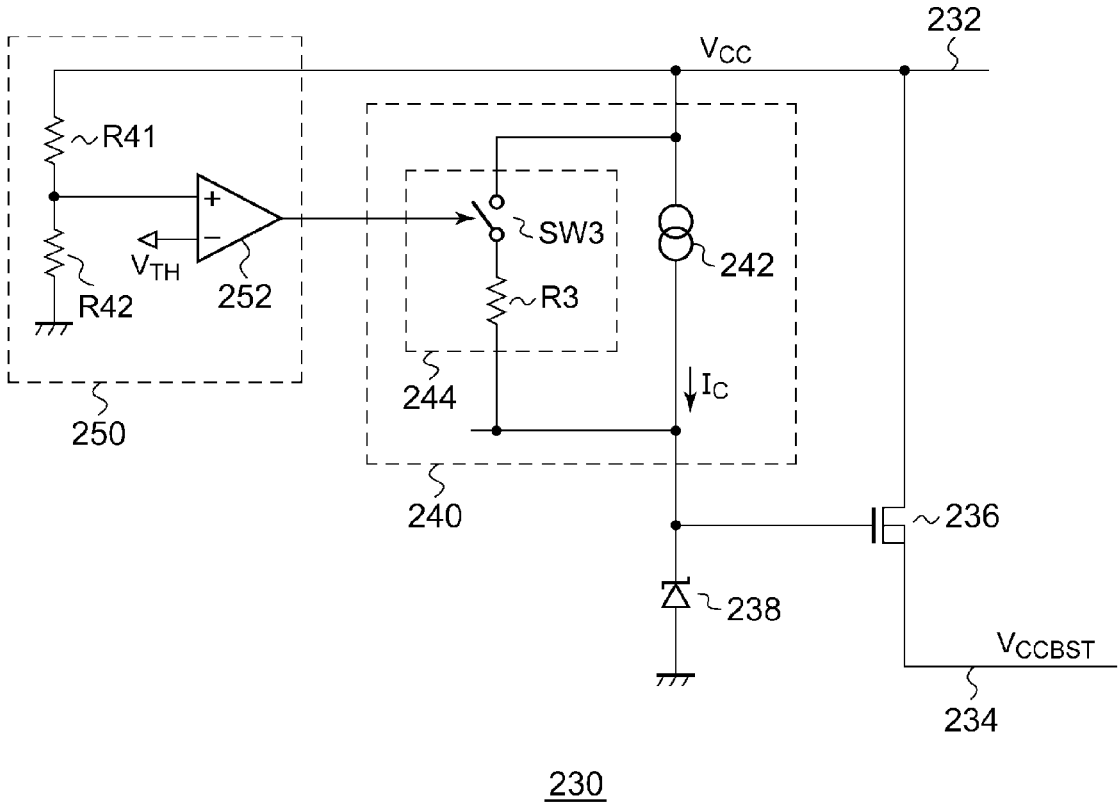
232
VCC
R41
SW3
242
VTH
R42
252
R3
244
IC
250
240
236
238
VCCBST
234
230

FIG. 6

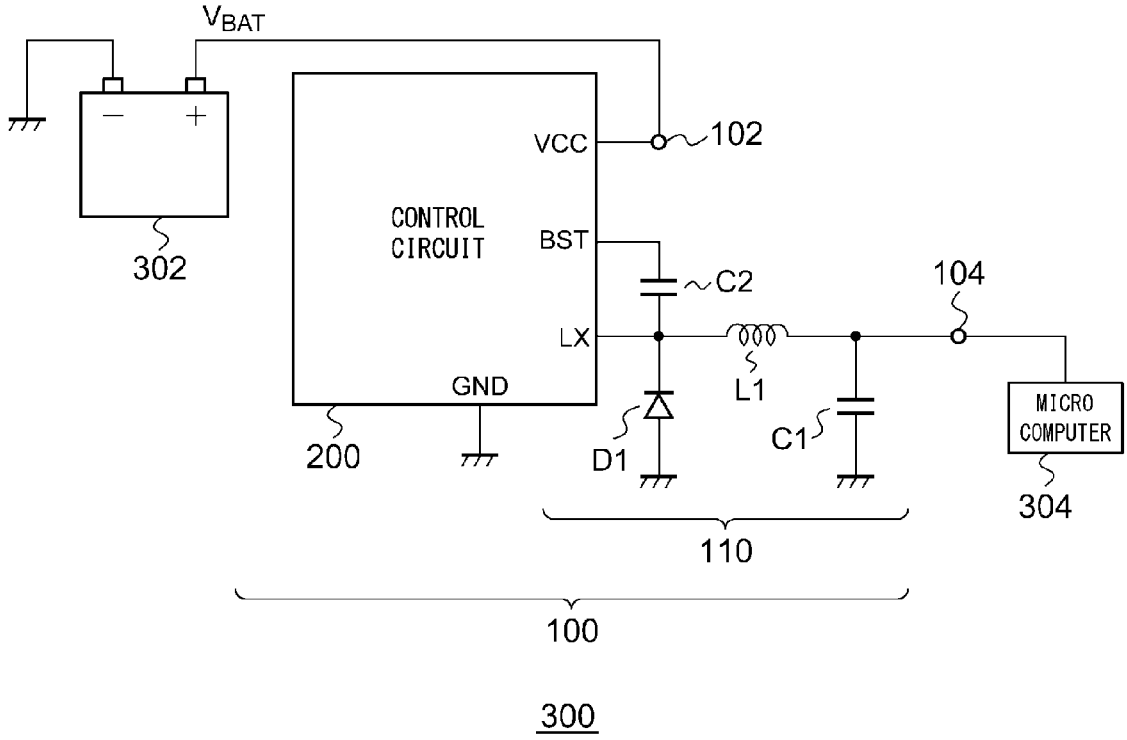
VBAT
VCC
102
CONTROL
CIRCUIT
BST
C2
104
LX
L1
GND
302
200
D1
C1
MICRO
COMPUTER
304
110
100
300