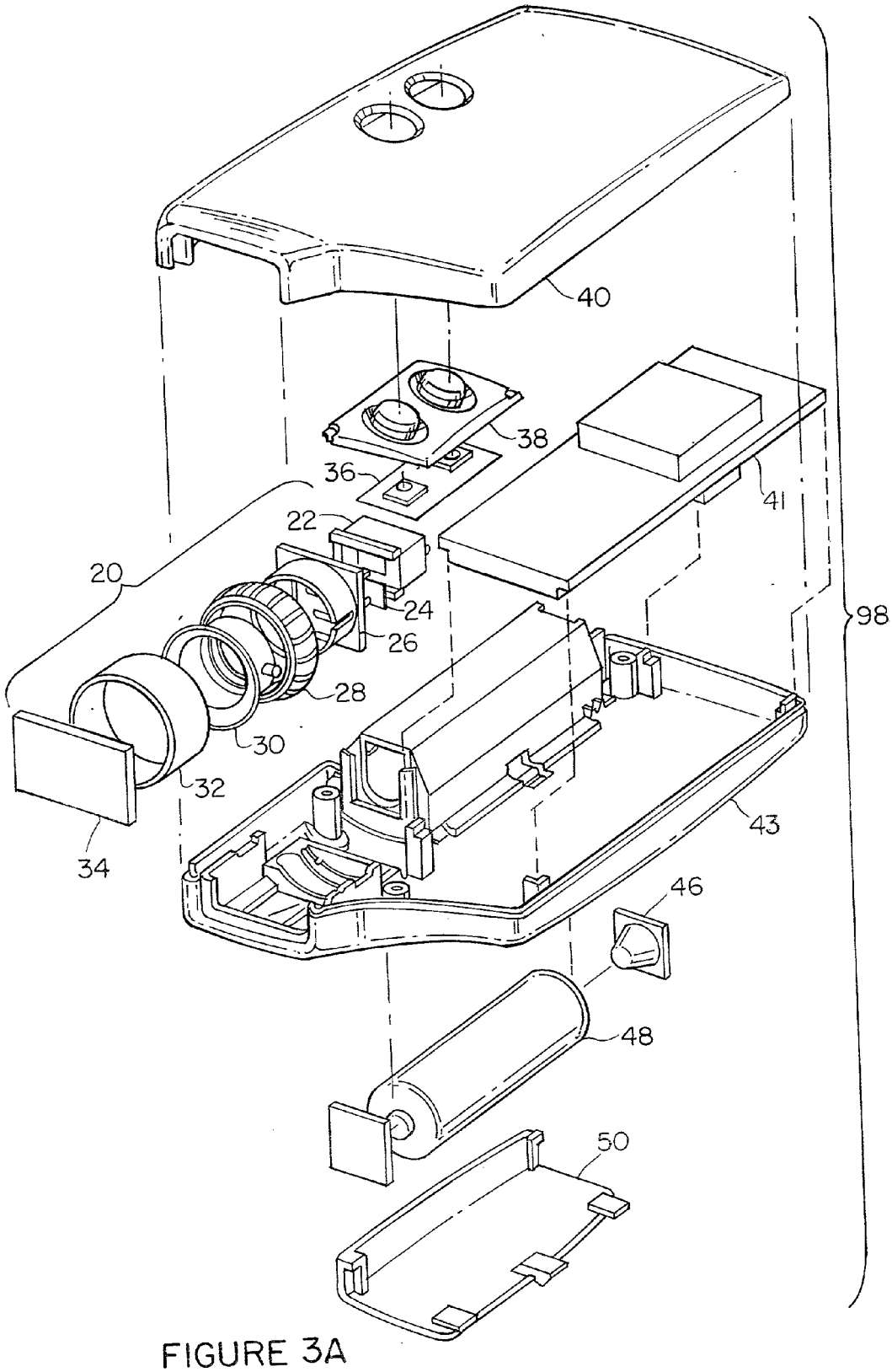

FIGURE 3A