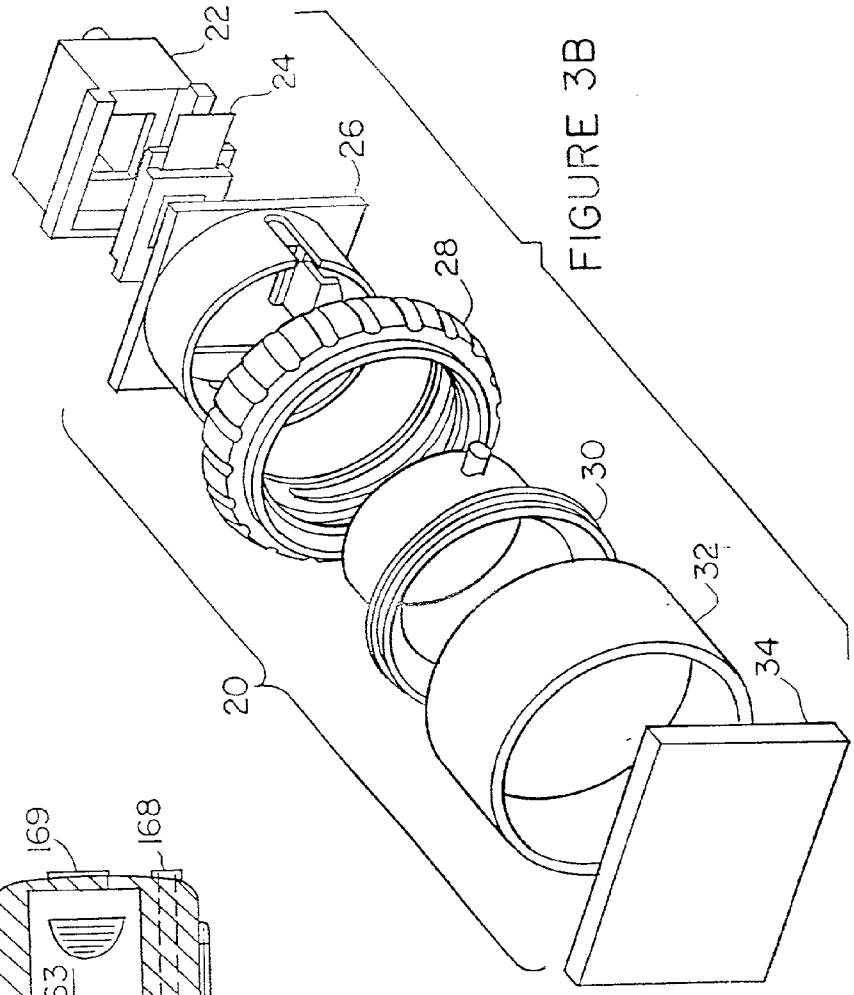

FIGURE 3B

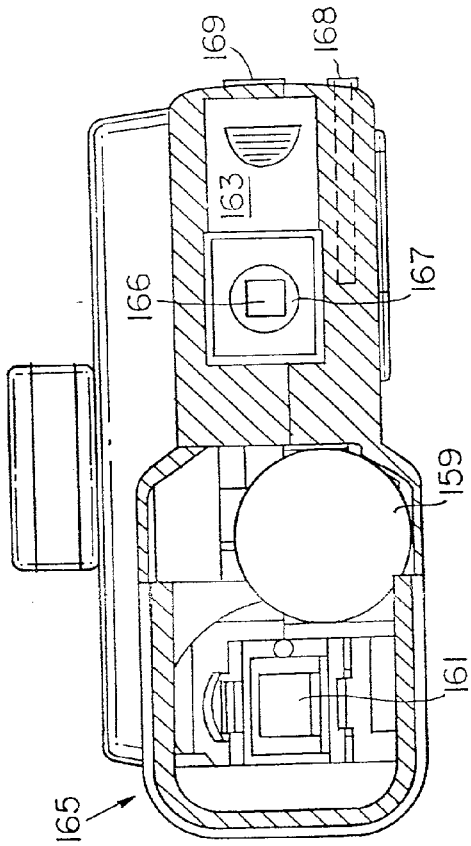

FIGURE 4Ba