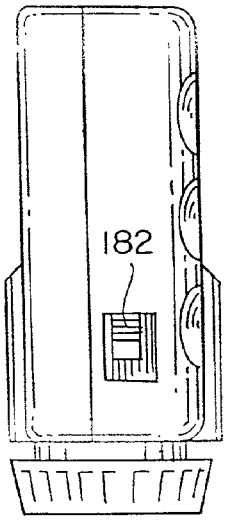

FIGURE 4G

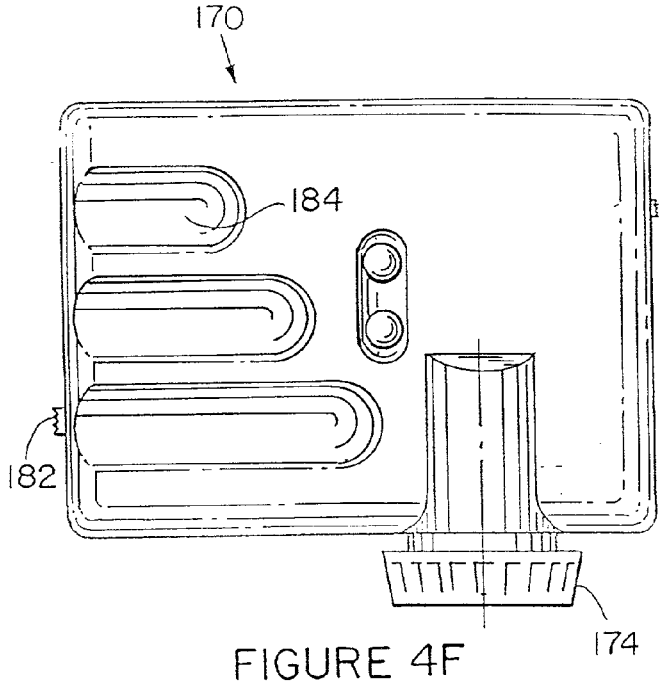

FIGURE 4F

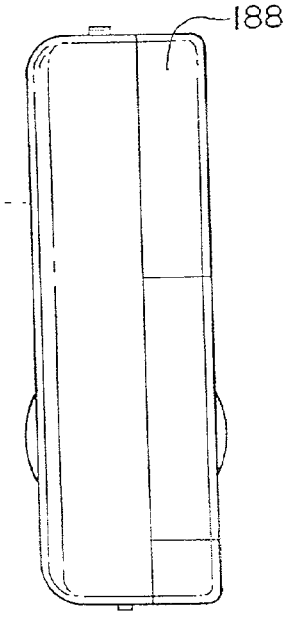

FIGURE 4H

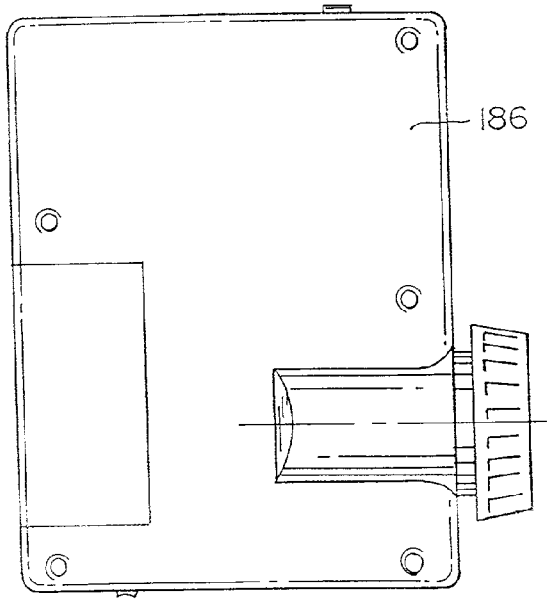

FIGURE 4I