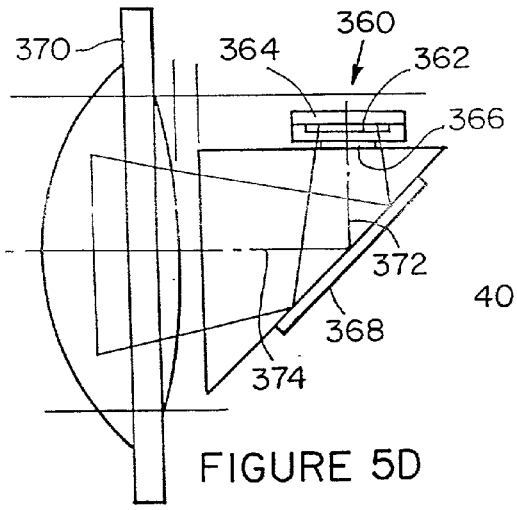

FIGURE 5D

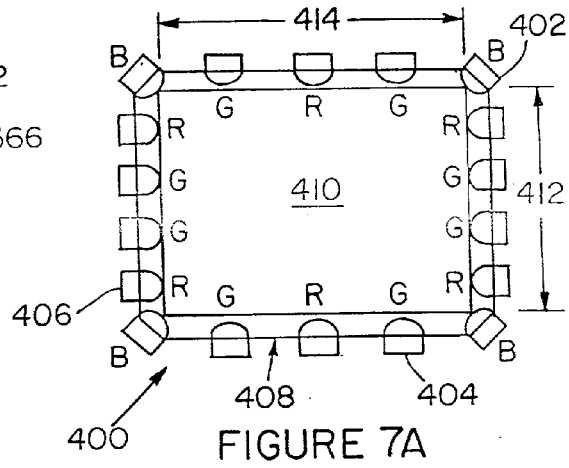

FIGURE 7A

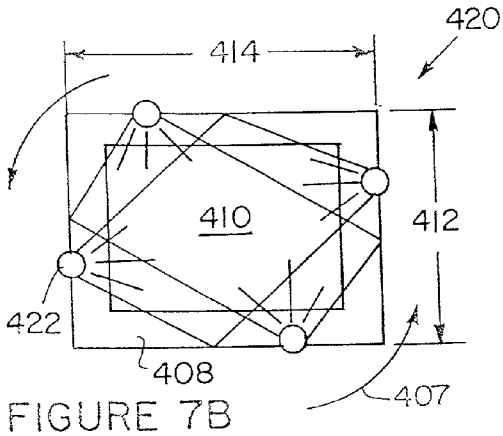

FIGURE 7B

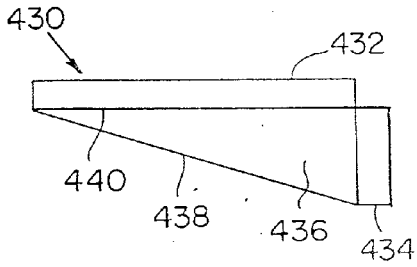

FIGURE 7C

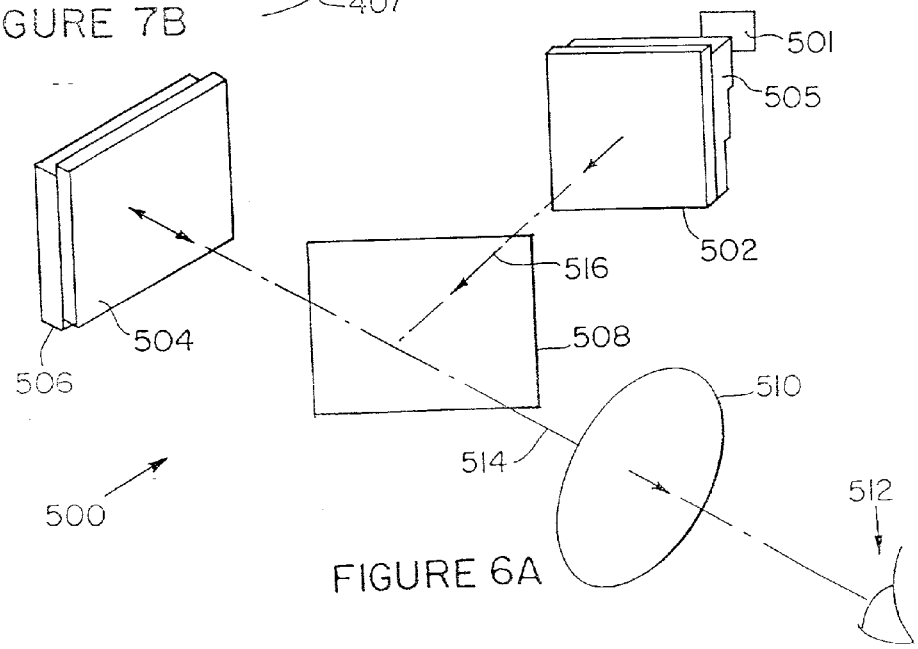

FIGURE 6A