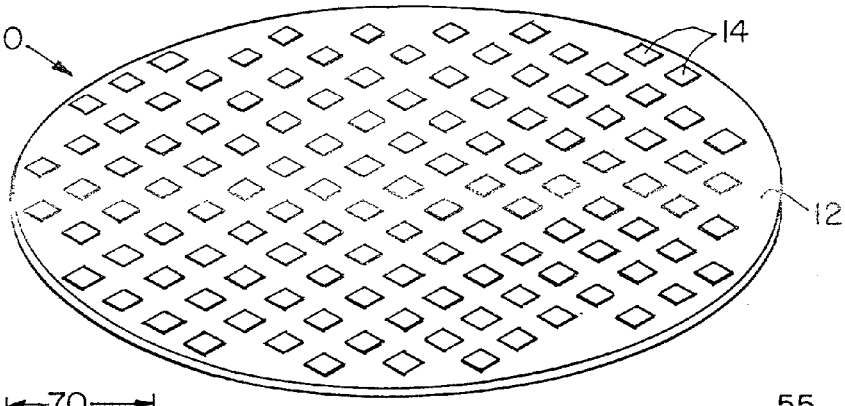

FIGURE 1

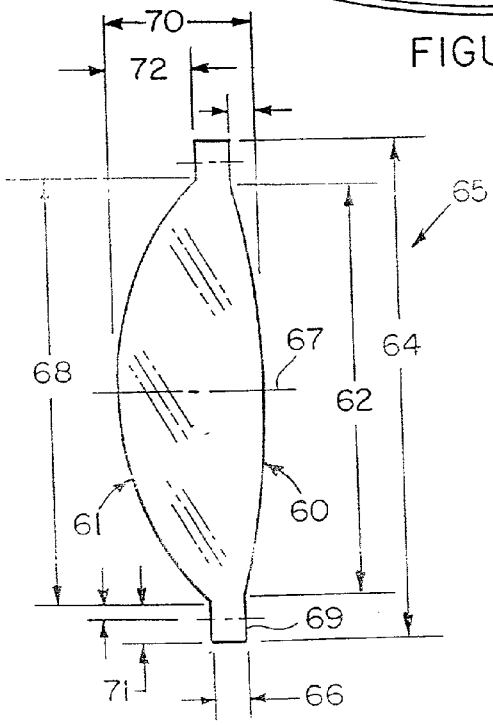

FIGURE 5A

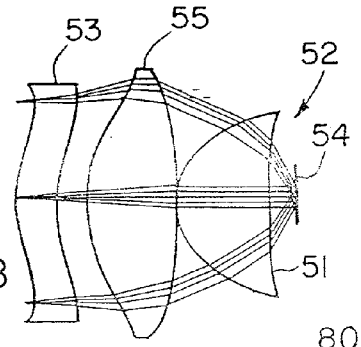

FIGURE 5B

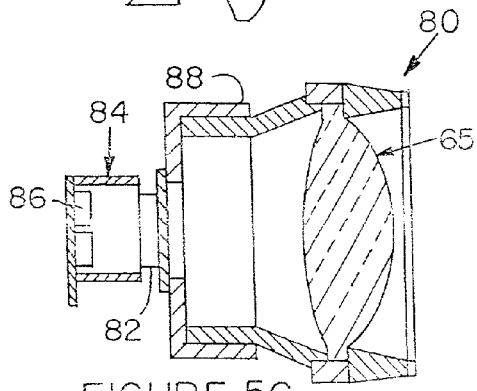

FIGURE 5C

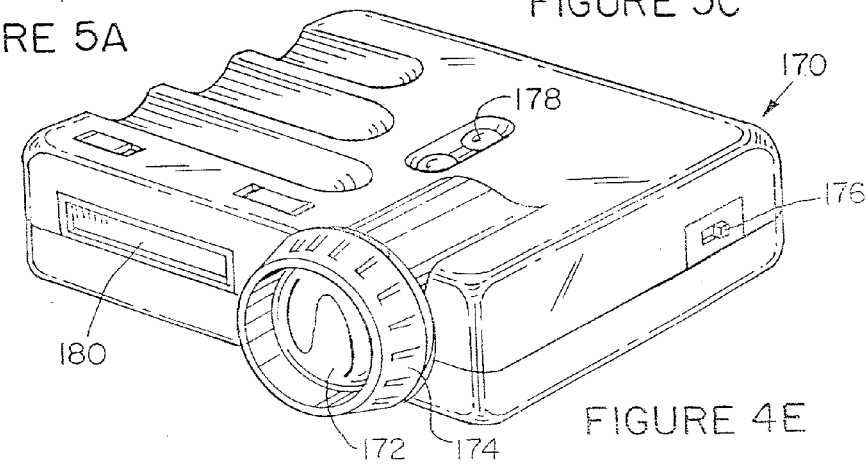

FIGURE 4E