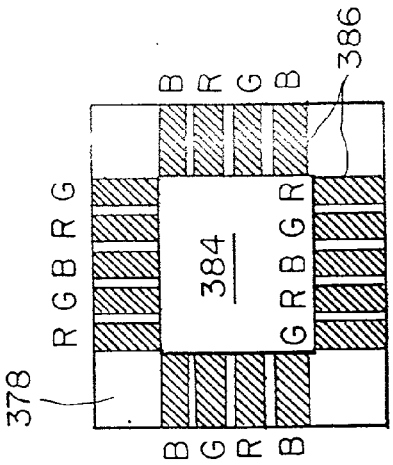


FIGURE 5F

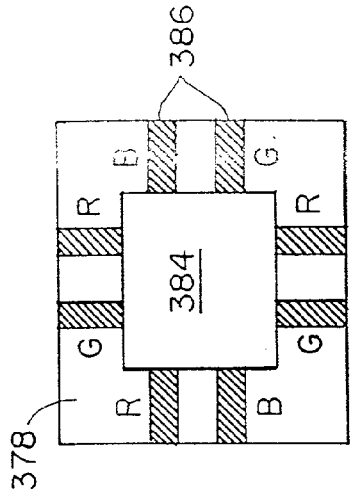


FIGURE 5G

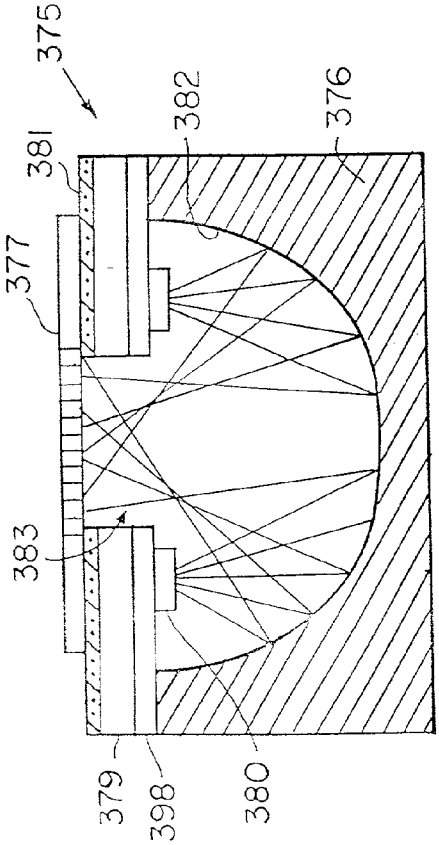


FIGURE 5E

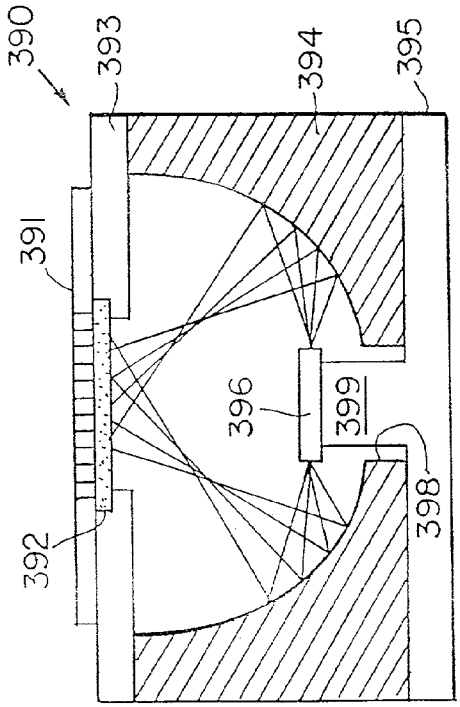


FIGURE 5H