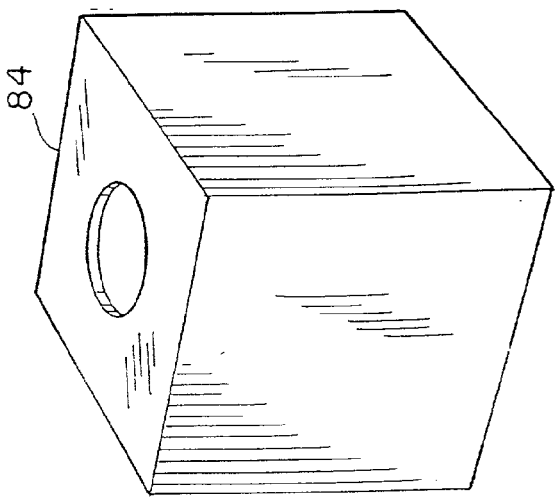

FIGURE 5I

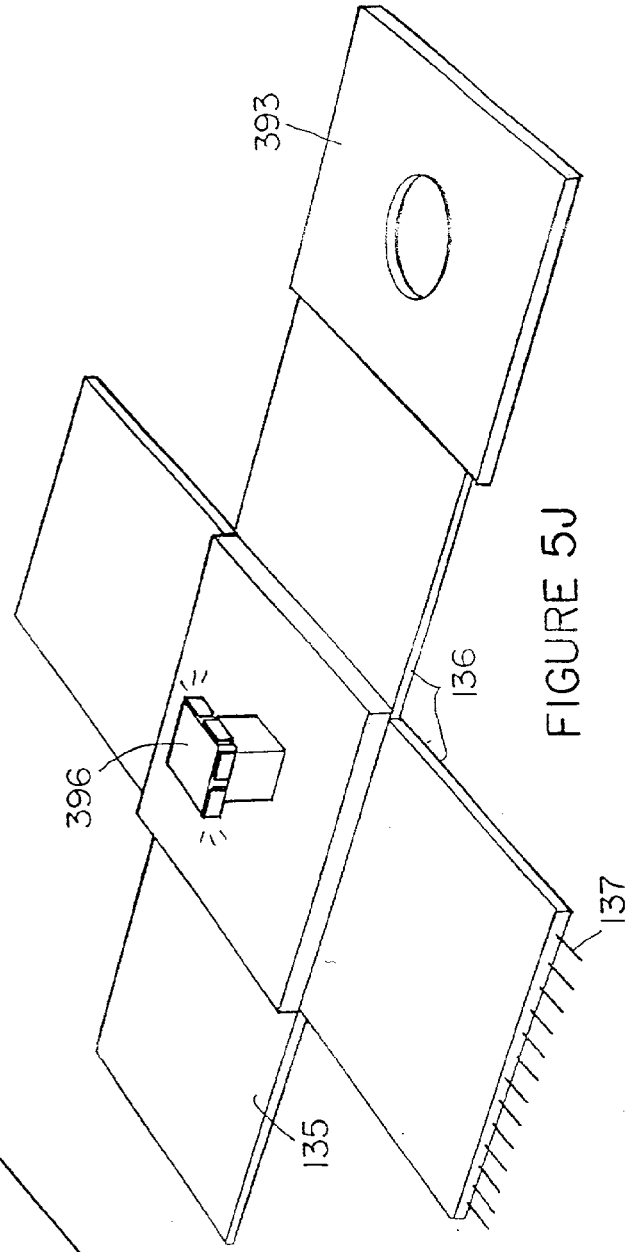

FIGURE 5J