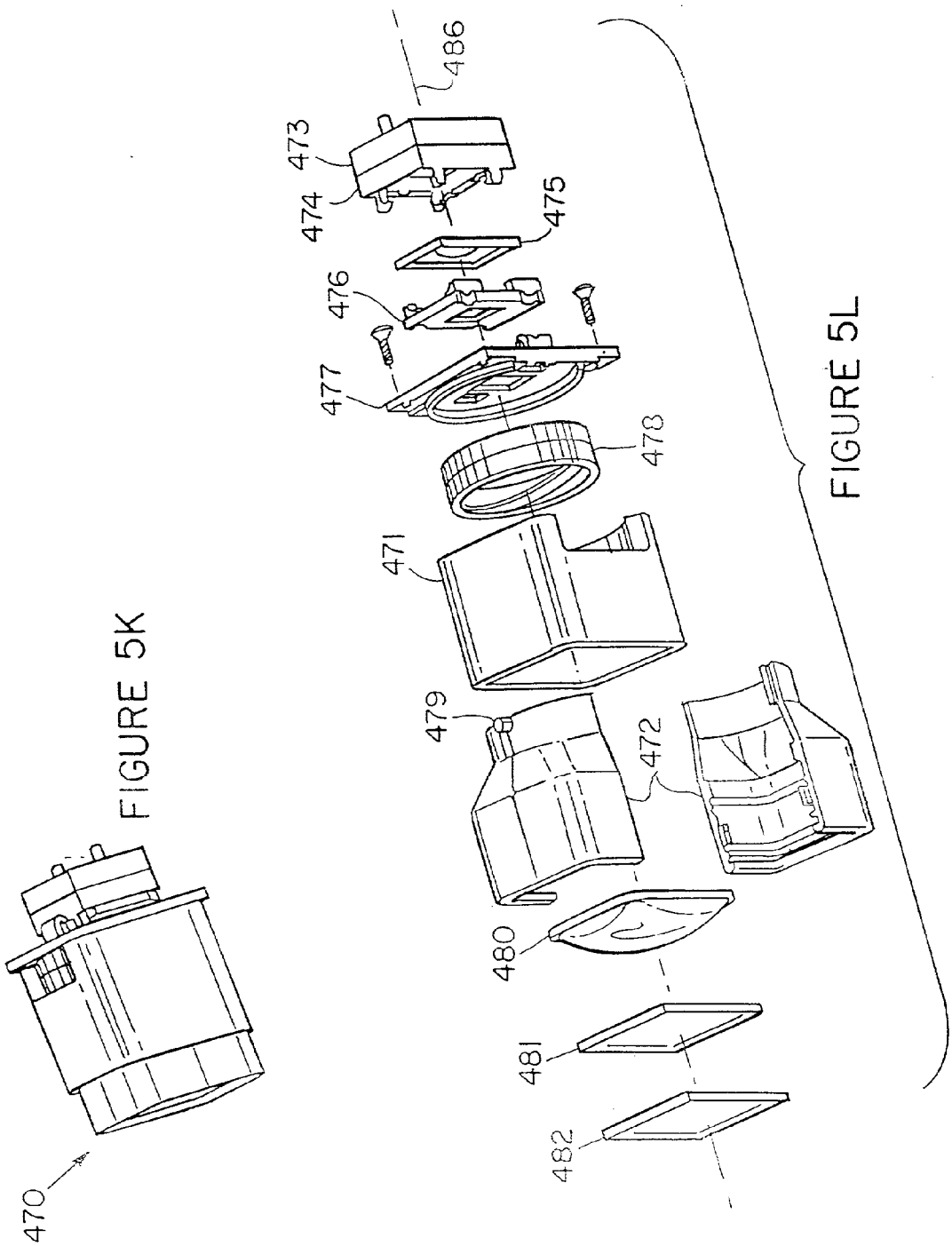

FIGURE 5K

FIGURE 5L