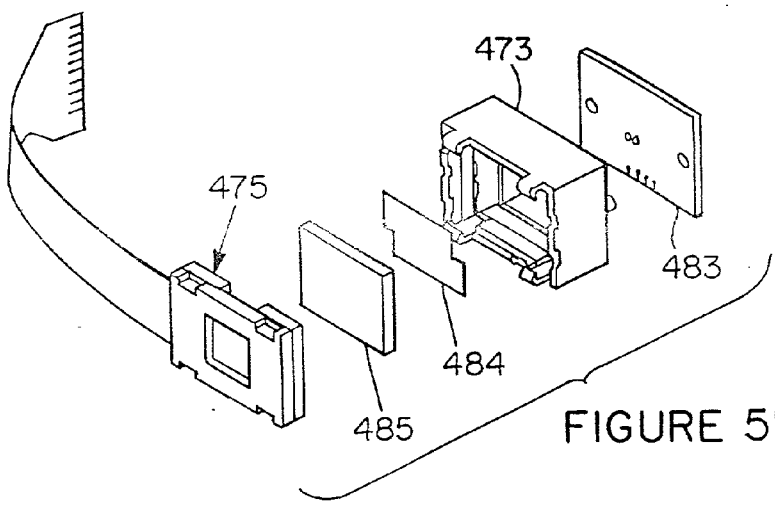

FIGURE 5M

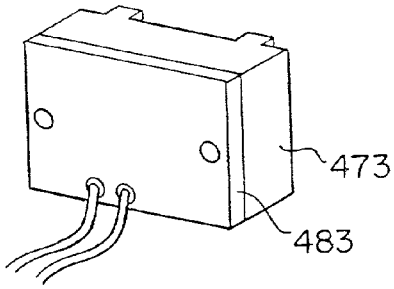

FIGURE 5N

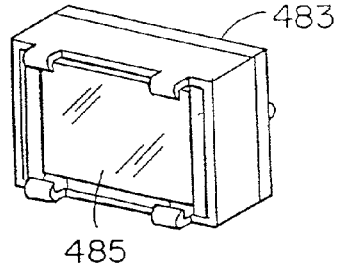

FIGURE 5O

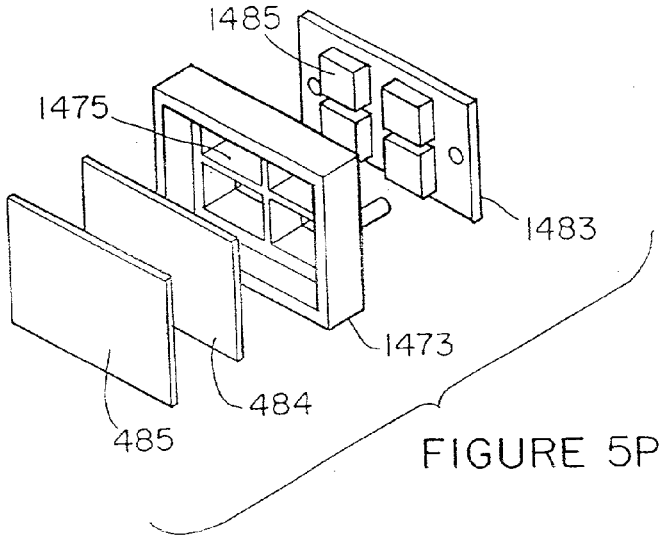

FIGURE 5P