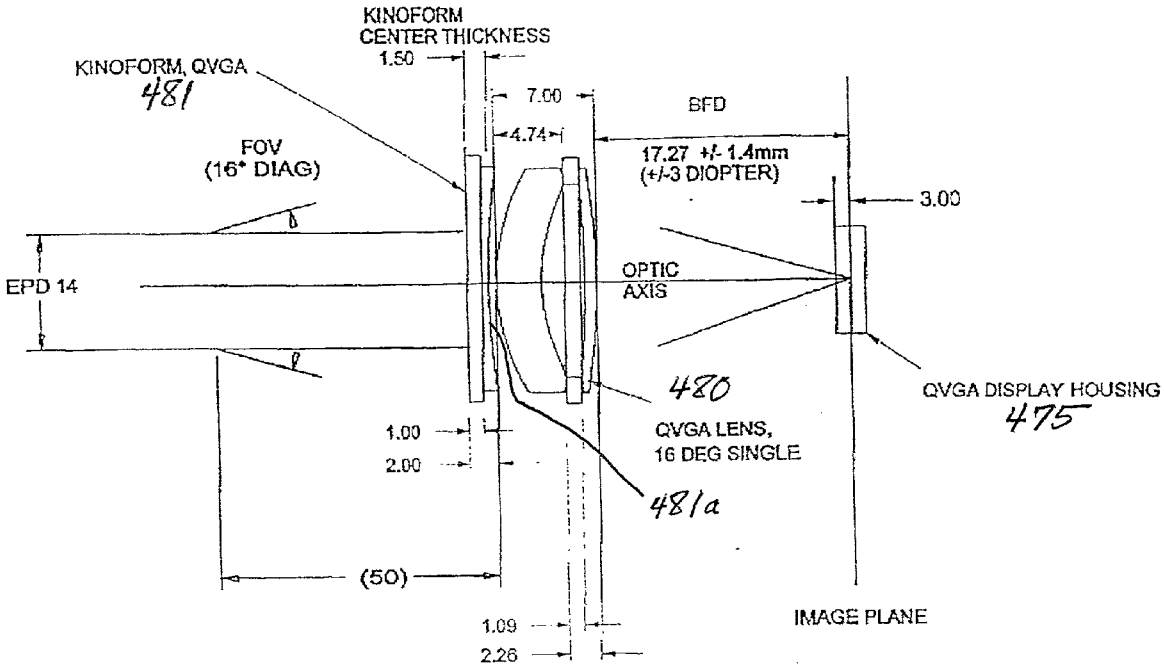

FIGURE 5Q

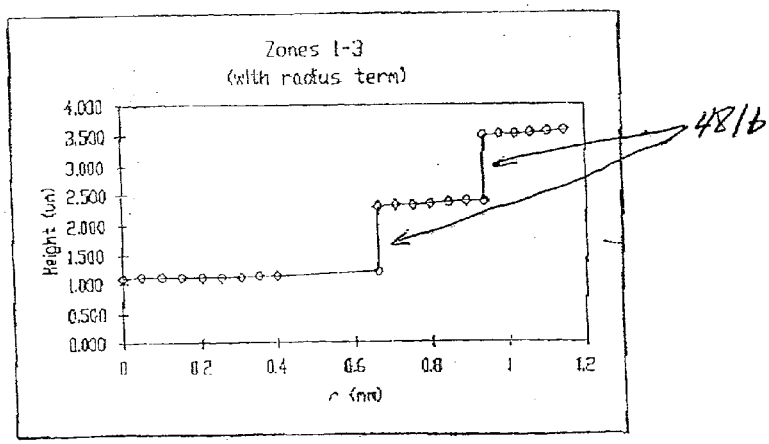

FIGURE 5R