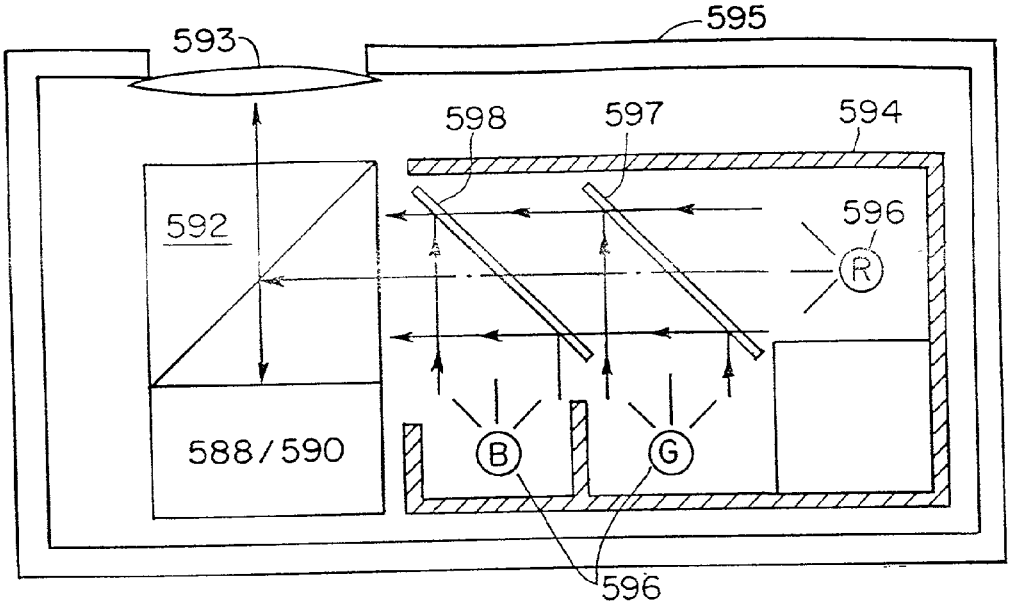

FIGURE 6C

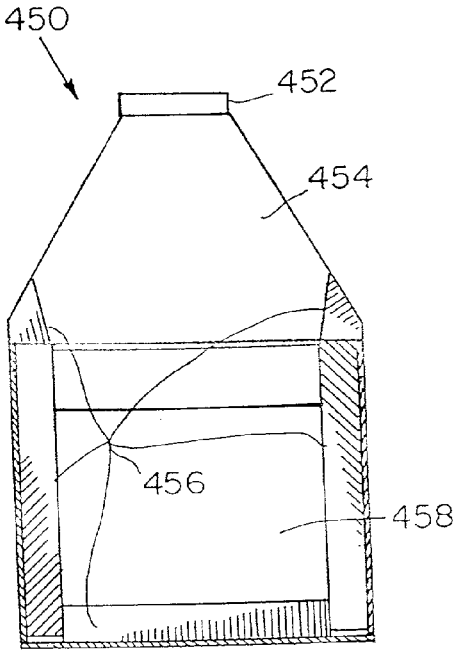

FIGURE 7D

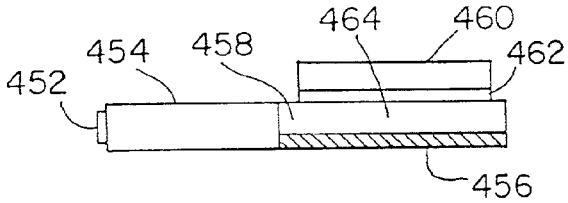

FIGURE 7E

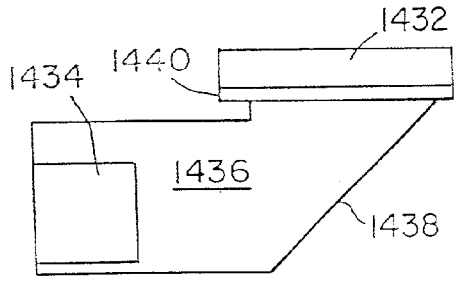

FIGURE 7G

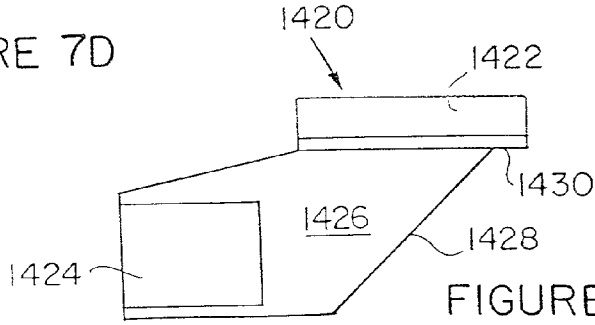

FIGURE 7F