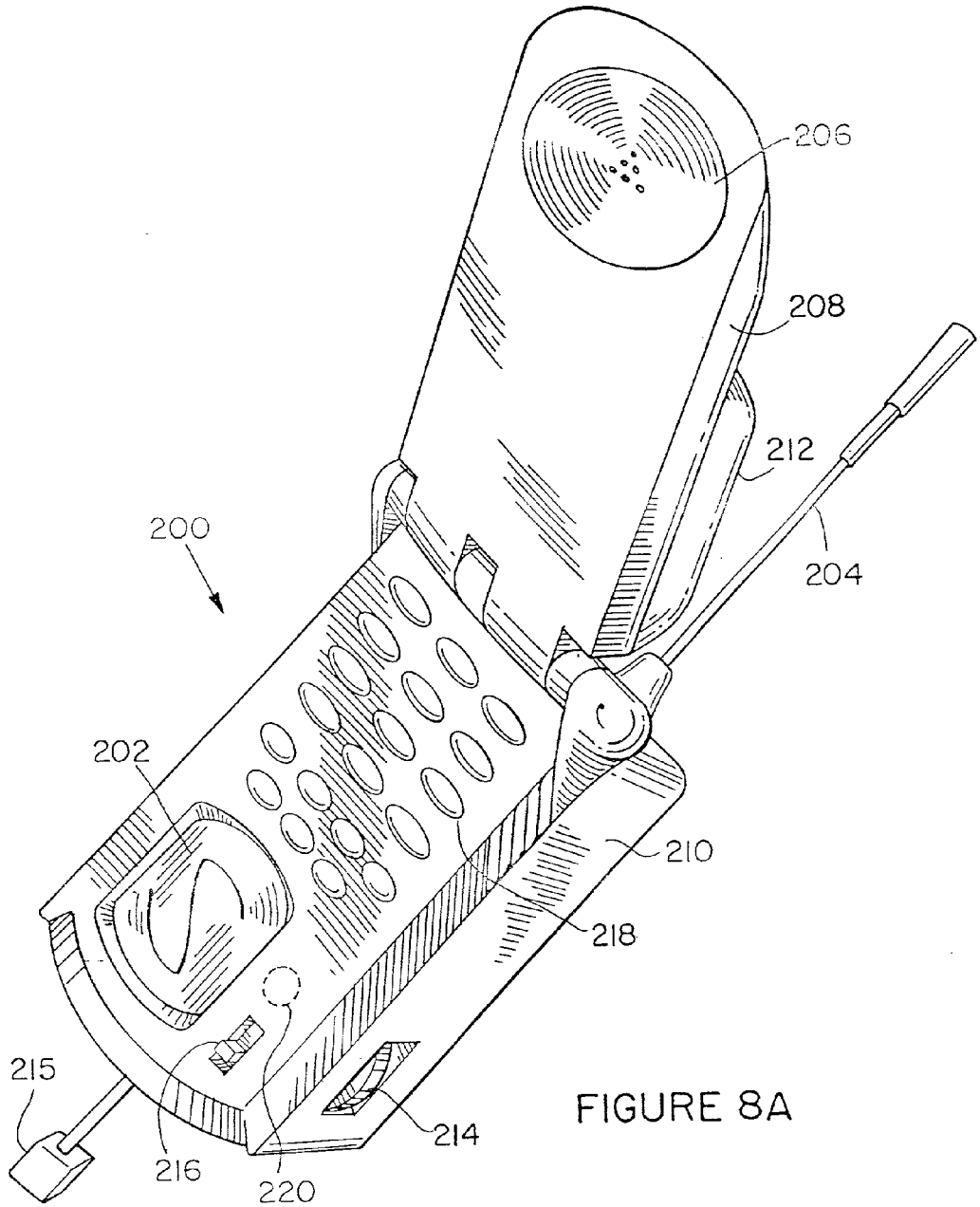

FIGURE 8A