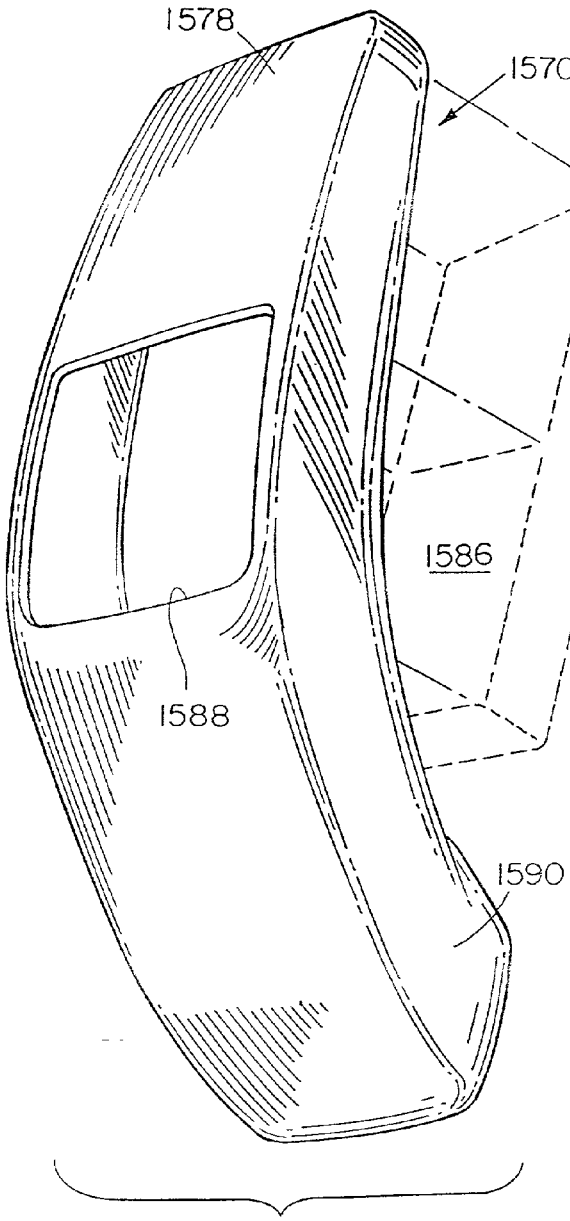

FIGURE 13P

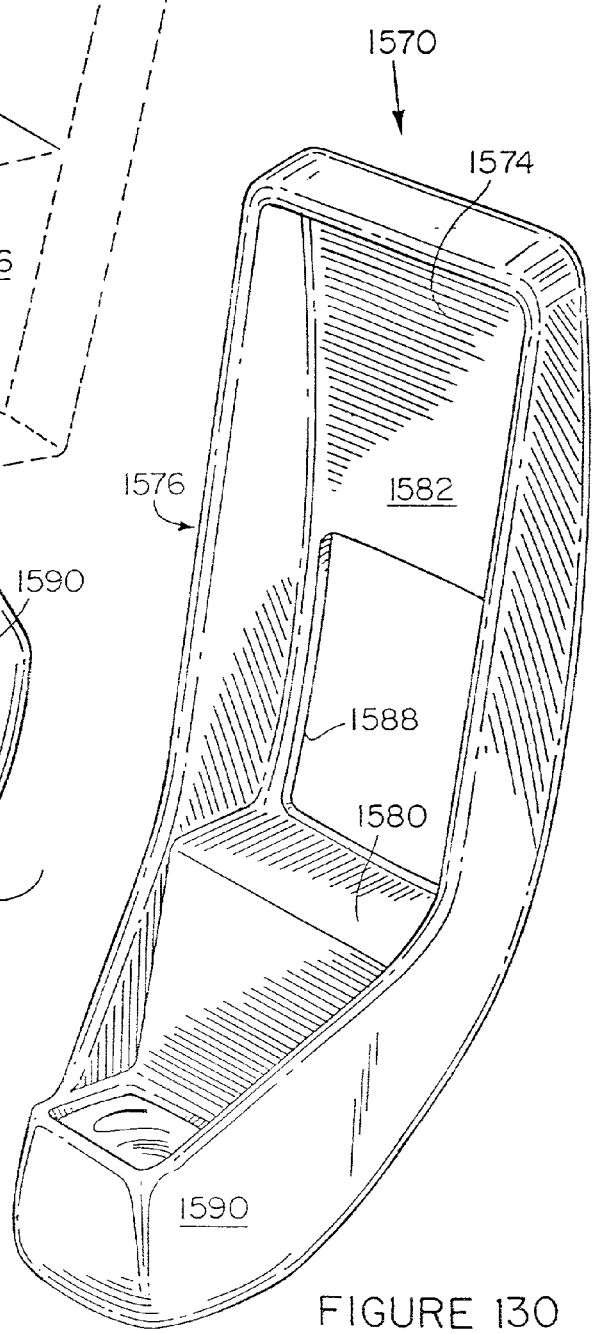

FIGURE 13O