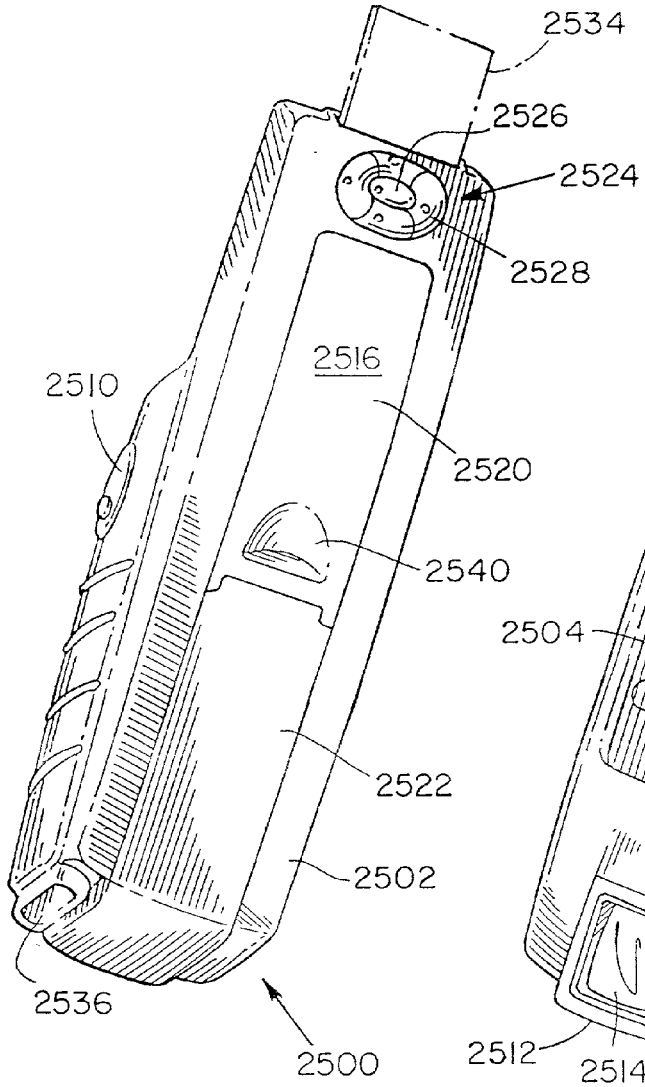

FIGURE 13Q

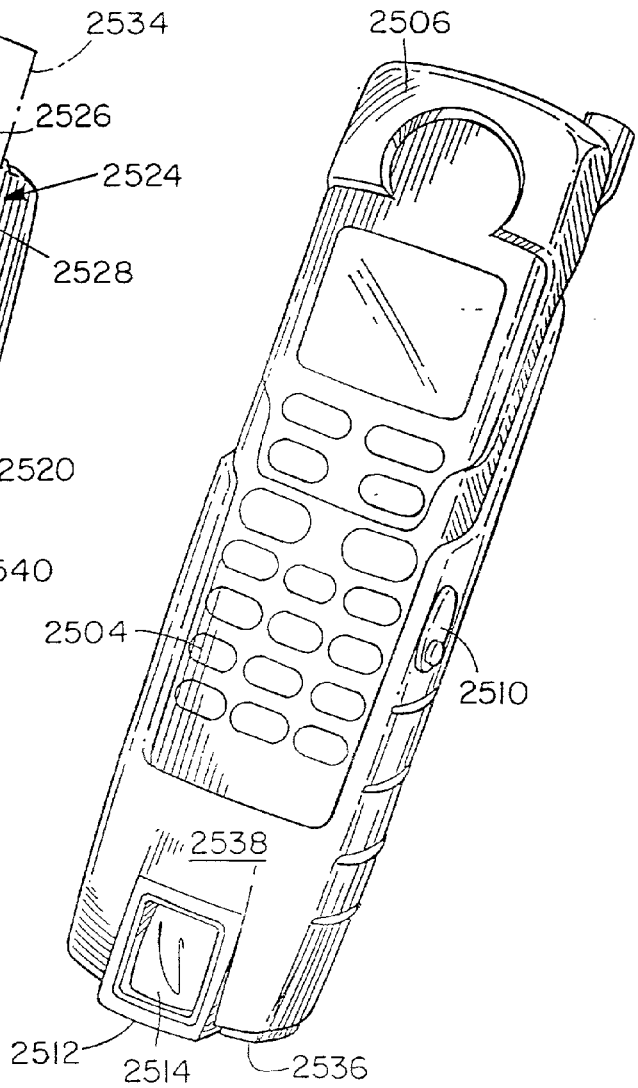

FIGURE 13R