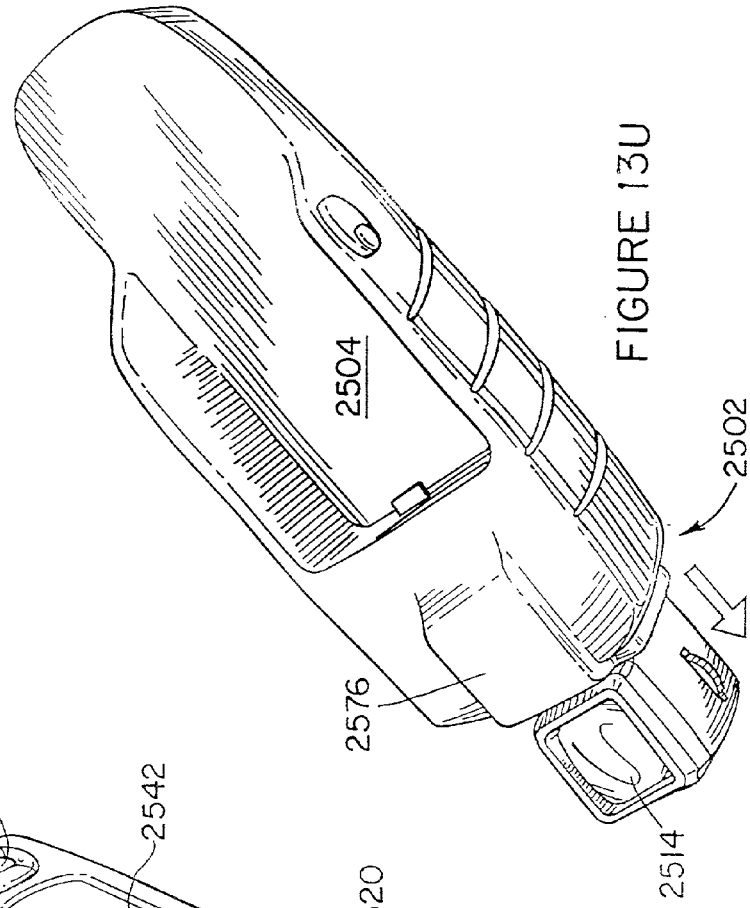

FIGURE 13U

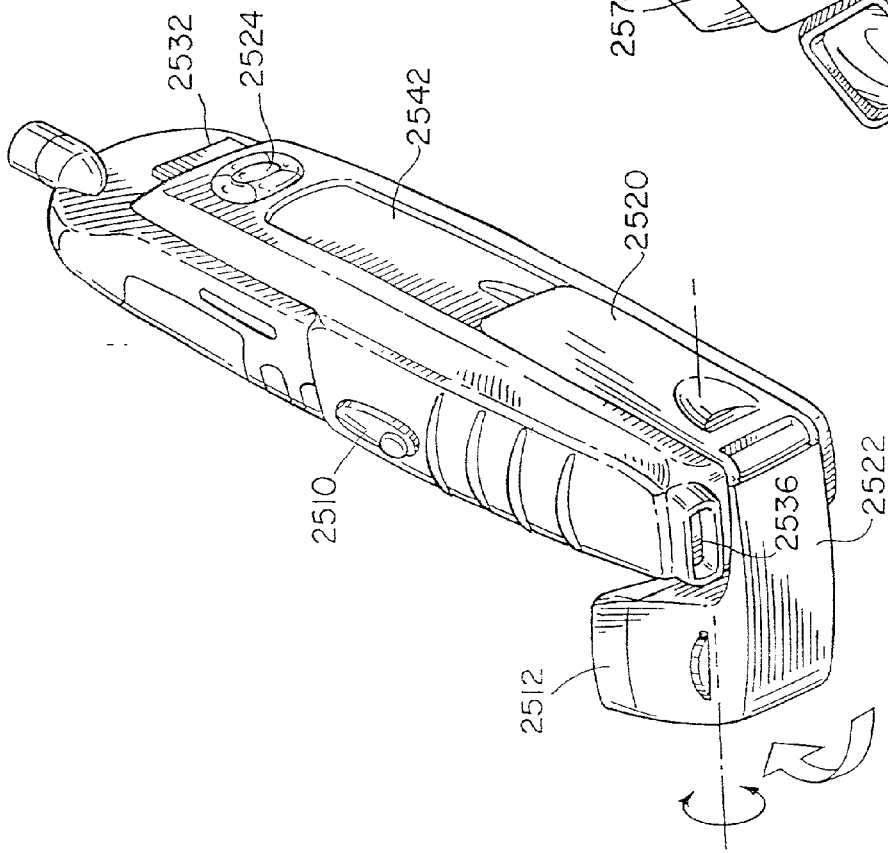

FIGURE 13S