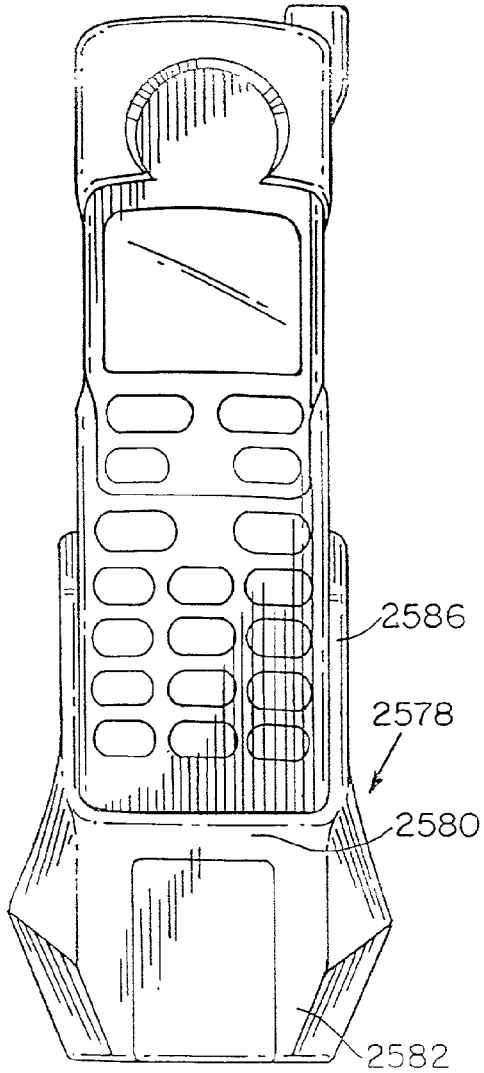

FIGURE 13V

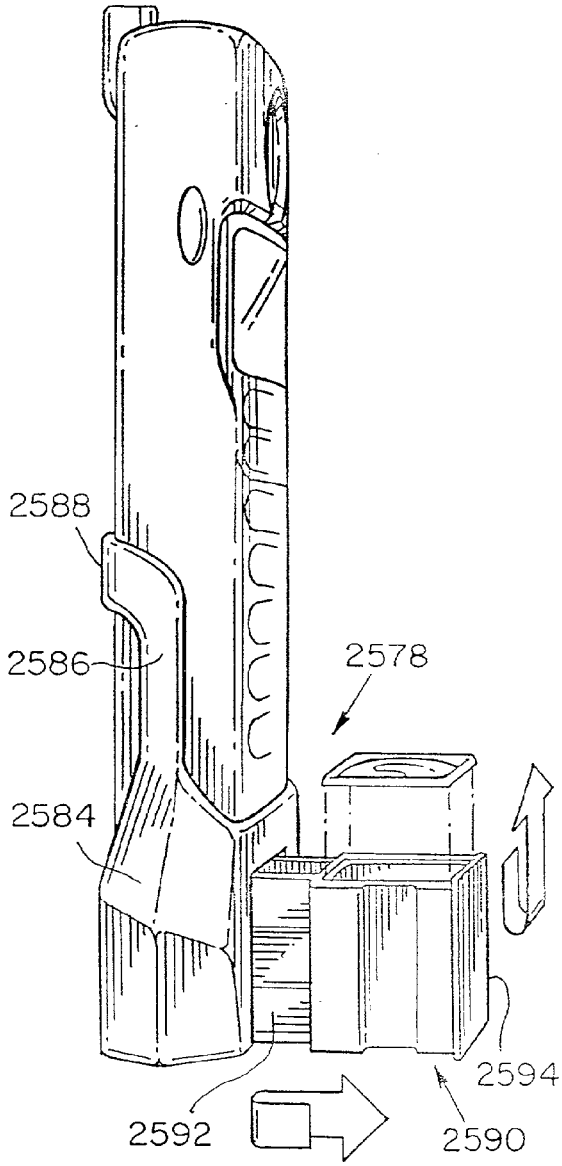

FIGURE 13W